Air to water heat pump UNITHERM 3 SPLIT R32

Owner's manual

Models:

CH-HP8.0SIRM3
CH-HP10SIRM3
CH-HP12SIRK(M)3
CH-HP14SIRK(M)3
CH-HP16SIRK(M)3

Thank you for choosing our product.
Please read this Owner's Manual carefully before operation and retain it for future reference.
If you have lost the Owner's Manual, please contact the local agent or visit www.cooperandhunter.com.

To Users

Thank you for selecting Gree's product. Please read this instruction manual carefully before installing and using the product, so as to master and correctly use the product. In order to guide you to correctly install and use our product and achieve expected operating effect, we hereby instruct as below:

(1) This equipment should be installed, operated or maintained by the qualified servicemen who have had specific training. During operation, all safety issues covered in the labels, User's Manual and other literature should be followed strictly. This equipment is not intended for use by persons (including children) with reduced physical, sensory or mental capabilities, or lack of experience and knowledge, unless they have been given supervision or instruction concerning use of the appliance by a person responsible for their safety. Children should be supervised to ensure that they do not play with the appliance.

(2) This product has gone through strict inspection and operational test before leaving the factory. In order to avoid damage due to improper disassembly and inspection, which may impact the normal operation of unit, please do not disassemble the unit by yourself. You can contact our designated dealer or local service center for professional support if necessary.

(3) When the product is faulted and cannot be operated, please contact our designated dealer or local service center as soon as possible by providing the following information.

- Contents of nameplate of product (model, cooling/heating capacity, product No., ex-factory date).
- Malfunction status (specify the situations before and after the error occurs).

(4) All the illustrations and information in the instruction manual are only for reference. In order to make the product better, we will continuously conduct improvement and innovation without further notice.

Contents

Safety Notices (Please be sure to abide) 1
1. Diagram of the Operating Principle 8
2. Operating Principle of the Unit 8
3. Nomenclature 10
4. Installation Example 11
5. Main Components 14
5.1 Indoor unit 14
5.2 Outdoor unit 15
6. Installation Guideline of Outdoor Unit 16
6.1 Instruction to installation 16
6.2 Installation of outdoor unit 16
7. Installation of Indoor Unit 18
7.1 Selection of the installation location for the indoor unit 18
7.2 Space requirements for installation 19
7.3 Installation process of indoor unit 19
7.4 Outline dimension of indoor unit 20
7.5 Precautions on installation of indoor unit 20
7.6 Water volume and pump capacity (with pump) 21
7.7 Water volume and expansion vessel pressure 21
7.8 Selection of expansion vessel 22
8. Connection of Pipeline 22
8.1 Connection of outlet pipe for indoor & outdoor unit 22
8.2 Installation of protective layer on connection pipe 23
9. Remote Air Temperature Sensor 25
10. Thermostat 26
11. 2-Way Valve 26
12. 3-Way Valve 27
13. Other Auxiliary Heat Sources 28
14. Gate-controller 29
15. Charging and Discharging of Refrigerant 29
16. Refrigerant Collecting 30
17. Handling of the Unit 30
18. Installation of Insulated Water Tank 31
18.1 Installation measure 31

18.2 Outline dimension and parameter of water tank 32
18.3 Connection of waterway system 33
18.4 Electric wiring work 34
19. Wring Diagram 36
19.1 Control board 36
19.2 Electric wiring.....41
20. Commissioning.....47
20.1 Check before startup.....47
20.2 Test run 48
21. Daily Operation and Maintenance 49
21.1 Recovery.....50
21.2 Decommissioning.....50
21.3 Safety consideration 51
21.4 Notice before seasonal use 53
21.5 Requirements on water quality 53

Safety Notices (Please be sure to abide)

⚠ **WARNING**: If not abide strictly, it may cause severe damage to the unit or the people.

⚠ **NOTE**: If not abide strictly, it may cause slight or medium damage to the unit or the people.

This sign indicates that the operation must be prohibited. Improper operation may cause severe damage or death to people

This sign indicates that the items must be observed. Improper operation may cause damage to people or property.

⚠ NOTE
After receipt of the unit, check it for appearance, unit model compared with your desire and attachments. Design and installation work of the unit must be performed by authorized personnel according to applicable laws and regulations and this Instruction. After installation work, the unit cannot be energized unless there is not any problem in check. Ensure periodical clean and maintenance of the unit after normal operation of the unit for longer life and reliable operation. If the supply cord is damaged, it must be replaced by the manufacturer, its service agent or similarly qualified persons in order to avoid a hazard. The appliance shall be installed in accordance with national wiring regulations. This product is a kind of comfort air conditioning, and is not allowed to be installed where there are corrosive, explosive and inflammable substances or smog; otherwise it would lead to operation failure, shortened service life, five hazard or even severe injuries. Special air conditions are required for where mentioned above.

	Correct Disposure
	This marking indicates that this product should not be disposed with other household wastes throughout the EU.To prevent possible harm to the environment or human health from uncontrolled waste disposal,recycle it responsibly to promote the sustainable reuse of material resources. To retuern your used device,please use the return and collection systems or contact the retailer where the product was purchased. They can take this product for environmental safe recycling. R32:675

⚠ WARNING		
Once abnormality likeburning smell occurs, please cut off the power supply immediately and then contact with service center. 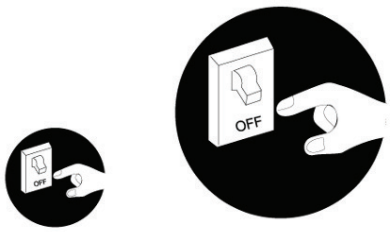 If the abnormality still exists, the unit may be damaged and electric shock or fire may result.	Don't operate the unit with wet hand. Otherwise, it may cause electric shock.	Before installation,please see if the voltage of local place accords with that on nameplate of unit and capacity of power supply, power cord or socket is suitable for input power of this unit.
Special circuit must be adopted for power supply to prevent fire. Do not use octopus multipurpose plug or mobile terminal board for wire connection.	Be sure to pull out the power plug and drain the indoor unit and water tank when unit is not in use for a long time. 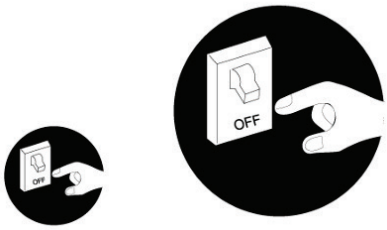 Otherwise, the accumulated dust may cause overheating,fire or freeze of water tank or coaxial heater exchanger in winter.	Never damage the electric wire or use the one which is not specified. Otherwise, it may cause overheating or fire.

Before cleaning please cut off the power supply. 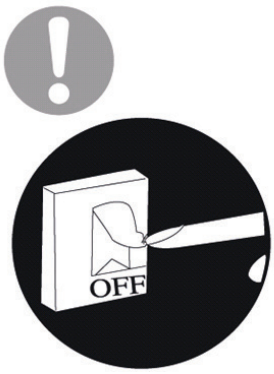 Otherwise, it may cause electric shock or damage.	The power supply must adopt special circuit with leakage switch and enough capacity.	User can not change power cord socket without prior consent. Wiring working must be done by professionals. Ensure good earthing and don't change earthing mode of unit.
Earthing: the unit must be earthed reliably ! The earthing wire should connect with special device of buildings. 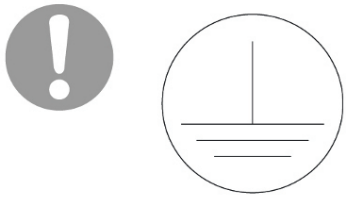 If not, please ask the qualified personnel to install. Furthermore, don't connect earth wire to gas pipe, water pipe, drainage pipe or any other improper places which professional does not recognize.	Never insert any foreign matter into outdoor unit to avoid damage . And never insert your hands into the air outlet of outdoor unit. 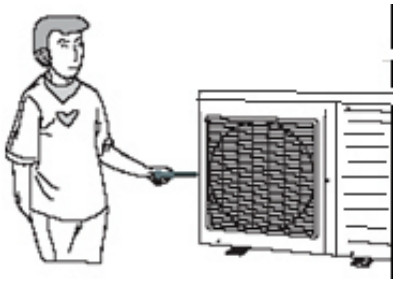	Don't attempt to repair the unit by yourself. Improper repair may cause electric shock or fire, so you should contact the service center to repair.

Don't step on the top of the unit or place anything on it. There is the danger of fall of things or people.	Never block the air inlet and outlet of unit. 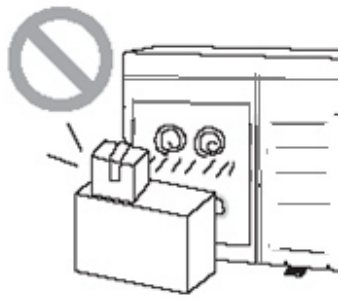 It may reduce efficiency or cause stop of the unit and even fire.	Keep pressurized spray, gas holder and so on away from the unit above 1m . It may cause fire or explosion.
Please note whether the installation stand is firm enough or not. 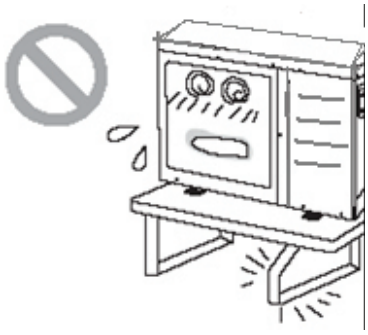 If damaged, it may cause fall of the unit and injury of people.	Unit should be installed at the place with good ventilation to save energy.	When there is not water in water tank, never power the unit on to run.

⚠ WARNING

Do not use means to accelerate the defrosting process or to clean, other than those recommended by the manufacturer. Should repair be necessary, contact your nearest authorized service centre. Any repairs carried out by unqualified personnel may be dangerous. The appliance shall be stored in a room without continuous operating ignition sources. (for example: open flames, an operating gas appliance or an operating electric heater.) Do not pierce or burn.

Appliance shall be installed, operated and stored in a room with a floor area larger than Xm .(Please refer to table “a” in section of “ Safety Operation of Inflammable Refrigerant” for space X.)

Appliance filled with flammable gas R32. For repairs, strictly follow manufacturer’s instructions only. Be aware that refrigrants not contain odour. Read specialist’s manual.

If a stationary appliance is not fitted with a supply cord and a plug, or with other means for disconnection from the supply mains having a contact separation in all poles that provides full disconnection under overvoltage category III conditions, the instructions shall state that means for disconnection must be incorporated in the fixed wiring in accordance with the wiring rules.

This appliance can be used by children aged from 8 years and above and persons with reduced physical, sensory or mental capabilities or lack of experience and knowledge if they have been given supervision or instruction concerning use of the appliance in a safe way and understand the hazards involved. Children shall not play with the appliance. Cleaning and user maintenance shall not be made by children without supervision.

The appliance shall be stored in a well-ventilated area where the room size corresponds to the room area as specified for operation.

The appliance shall be stored in a room without continuously operating open flames (for example an operating gas appliance) and ignition sources (for example an operating electric heater).

The appliance shall be stored so as to prevent mechanical damage from occurring.

⚠ NOTE

	Appliance filled with flammable gas R32.
	Before use the appliance, read the owner’s manual first.
	Before install the appliance, read the installation manual first.
	Before repair the appliance, read the service manual first.

To realize the function of the air conditioner unit, a special refrigerant circulates in the system. The used refrigerant is the fluoride R32, which is specially cleaned.The refrigerant is flammable and inodorous. Furthermore, it can leads to explosion under certain conditions. But the flammability of the refrigerant is very low. It can be ignited only by fire.

Compared to common refrigerants, R32 is a nonpolluting refrigerant with no harm to the ozonosphere. The influence upon the greenhouse effect is also lower. R32 has got very good thermodynamic features which lead to a really high energy efficiency. The units therefore need a less filling.

Before installation, please check if the adopted power is accordance with that listed on nameplate, and check the safety of power.

The unit shall contact with the supply mains by a full disconnection device under overvoltage category Ⅲ.

Before using, please check and confirm if wires and water pipes are connected correctly to avoid water leakage, electric shock or fire etc.

Don’t operate the unit with wet hand, and don’t allow children to operate the unit.

The On/off in the instruction is for the operation to on and off button of PCB for users; cut off power means to stop supplying power to the unit.

Don’t directly expose the unit under the corrosive ambient with water or dampness.

Don’t operate the unit without water in water tank .The air outlet/inlet of unit cannot be blocked by other objects.

The water in unit and pipeline should be discharged if the unit is not in use, to prevent the water tank, pipe line and water pump from frost-cracking.

Never press the button with sharp objects to protect manual controller. Never use other wires instead of special communication line of the unit to protect control elements. Never clean the manual controller with benzene, thinner or chemical cloth to avoid fading of surface and failure of elements. Clean the unit with the cloth soaked in neutral eradicator. Slightly clean the display screen and connecting parts to avoid fading.

The power cord must be separated with the communication line.

Any person who is involved with working on or breaking into a refrigerant circuit should hold a current valid certificate from an industry-accredited assessment authority, which authorises their competence to handle refrigerants safely in accordance with an industry recognised assessment specification.

Servicing shall only be performed as recommended by the equipment manufacturer. Maintenance and repair requiring the assistance of other skilled personnel shall be carried out under the supervision of the person competent in the use of flammable refrigerants.

maximum and minimum water operating temperatures.

Item	Minimum water operating temperatures	Maximum water operating temperatures
Cooling	7°C	25°C
Heating	20°C	60°C
Water heating	40°C	80°C

maximum and minimum water operating pressures.

Item	Minimum water operating pressures	Maximum water operating pressures
Cooling	0.05MPa	0.25MPa
Heating		
Water heating		

maximum and minimum entering water pressures.

Item	Minimum entering water pressures	Maximum entering water pressures
Cooling	0.05MPa	0.25MPa
Heating		
Water heating		

The range of external static pressures at which the appliance was tested (add-on heat pumps, and appliances with supplementary heaters, only); If the supply cord is damaged, it must be replaced by the manufacturer, its service agent or similarly qualified persons in order to avoid a hazard.

The appliance is intended to be permanently connected to the water mains and not connected by a hose-set.

If there is any question, please contact with local dealer, authorized service center, agencies or our company directly.

1. Diagram of the Operating Principle

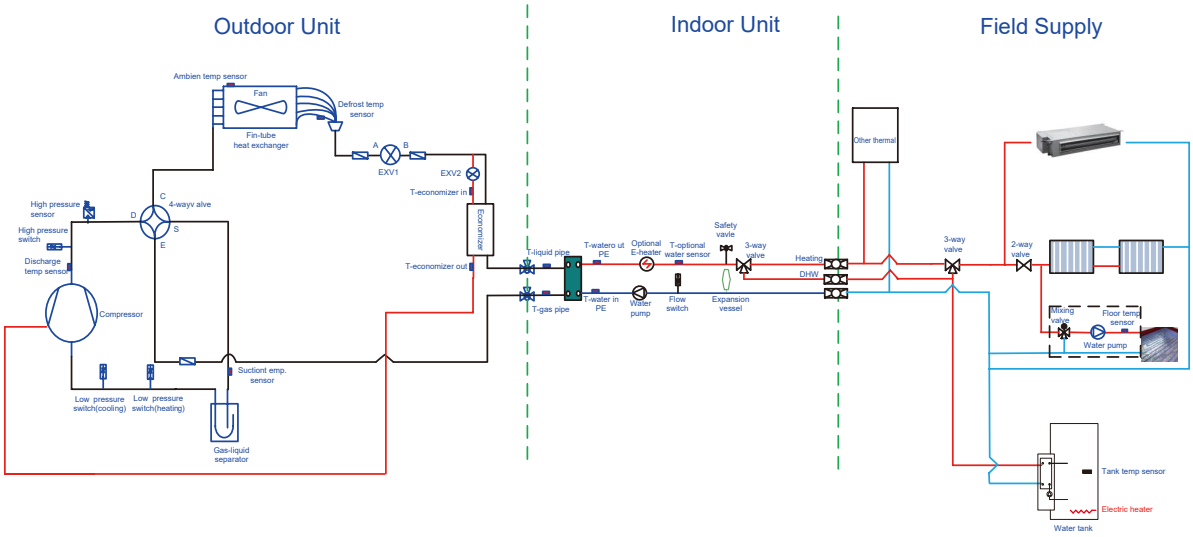

Notes

(a) Water mixing accessories are optional parts. When they are required, please contact the manufacturer.

(b) The 3-way valve to be installed on site should be controlled by the user.

2. Operating Principle of the Unit

DC Inverter Air to Water Heat Pump is composed of outdoor unit, indoor unit and internal-fan coil water tank. Operation functions:

(1) Cooling;
(2) Heating;
(3) Water heating;
(4) Cooling + water heating;
(5) Heating + water heating;
(6) Emergency mode;
(7) Quick water heating;
(8) Holiday mode;
(9) Forced Operation Mode;
(10) Quiet mode;
(11) Disinfection mode;
(12) Weather-dependent Operation;
(13) Floor debugging;
(14) Air removal of the water system;
(15) Other thermal.

Cooling: in cooling mode, the refrigerant is condensed in the outdoor unit and evaporated in the indoor unit. Via the heat exchange with water in the indoor unit, the temperature of water decreases and it releases heat while the refrigerant absorbs heat and evaporates. With the help of wired controller, the outflow temperature can meet the user's requirement. Through the control of valve, the low-temperature water in the system is connected with indoor fan coil and underground pipe, and exchanges heat with the indoor air so that the indoor temperature decreases to the required range.

Heating: in heating mode, the refrigerant evaporates in the outdoor unit and is condensed in the indoor unit. Via the heat exchange with water in the indoor unit, the water absorbs heat and its temperature increases while the refrigerant releases heat and is condensed. With the help of wired controller, the outflow temperature can meet the user's requirement. Through the control of valve, the high-temperature water in the system is connected with indoor fan coil and underground pipe, and exchanges heat with the indoor air so that the indoor temperature increases to the required range.

Water heating: in water heating mode: the refrigerant evaporates in the outdoor unit and is condensed in the indoor unit. Via the heat exchange with water in the indoor unit, the water absorbs heat and its temperature increase while the refrigerant releases heat and is condensed. With the help of wired controller, the outflow temperature can meet the user's requirement. Through the control of valve, the high-temperature water in the system is connected with the coil pipe of bearing water tank, and exchanges heat with the water in the water tank so that the temperature of water tank increases to the required range.

Cooling + water heating: when cooling mode exists together with the water heating mode, the user can set the priority of these two modes based on the needs. The default priority is heat pump. That is under the default setting, if cooling mode exists together with the water heating mode, the heat pump gives priority to cooling. In that case, water heating can only realized with e-heater of the water tank. Inversely, the heat pump gives priority to water heating and switches to cooling after finishing water heating.

Heating + water heating: when heating mode exists together with the water heating mode, the user can set the priority of these two modes based on the needs. The default priority is heat pump. That is under the default setting, if heating mode exists together with the water heating mode, the heat pump gives priority to heating. In that case, water heating can only realized with e-heater of the water tank. Inversely, the heat pump gives priority to water heating and switches to heating after finishing water heating.

Emergency mode: this mode is only available for heating and water heating. When the outdoor unit stops due to malfunction, enter the corresponding emergency mode; as to heating mode, after entering the emergency mode, heating can only be realized through e-heater of the indoor unit. When the setting outflow temperature or indoor temperature is reached, the e-heater of indoor unit will stop running; as to water heating mode, the e-heater of indoor unit stops while the e-heater of water tank runs. When the setting temperature or water tank is reached, the e-heater will stop running.

Quick water heating: in quick water heating mode, the unit runs according to the water heating control of heat pump and the e-heater of water tank runs at the same time.

Forced Operation Mode: this mode is only used for refrigerant recovery and debugging for the unit.

Holiday mode: this mode is only available for heating mode. This mode is set to keep indoor temperature or leaving water temperature in a certain range, so as to prevent water system of the unit from freezing or protect certain indoor articles from freezing damage. When the outdoor unit stops due to malfunction, the two e-heaters of the unit will run.

Disinfection mode: in this mode, the water heating system can be disinfected. When starting up the disinfection function and setting corresponding time to meet the requirement of disinfection mode, the function will start. After the setting temperature is reached, this mode will terminate.

Weather-dependent Operation: this mode is only available for space heating or space cooling. In Weather-dependent mode, the setting value (remote room air temperature or leaving water temperature) is detected and controlled automatically when the outdoor air temperature is changed.

Quiet mode: Quiet mode is available in cooling, heating and water heating mode. In quiet mode, the outdoor unit will reduce the running noise via automatic control.

Floor commissioning: this function is intended to preheat the floor periodically for the initial use.

Air removal of the water system: this function is intended to replenish water and remove air in the water system to make the equipment run at the stabilized water pressure.

Solar water heater: when the condition for starting the solar water heater is satisfied, the solar heater will start to heat the circulation water. Then the heated water will go to the water tank and exchange heat with water in it. At any condition, the solar water heater will be given priority for startup so as for energy conservation.

Other thermal: when the outdoor temperature is lower than the set point for starting other thermal and the unit is under the error condition and the compressor has stopped for three minutes, then the other thermal will start to supply heat or hot water to the room.

3. Nomenclature

CH	-	H	P	10	S	I	R	K	3	(I)		
1		2	3	4	5	6	7	8	9	10		

NO.	Description	Options
1	C&H	CH-Cooper&Hunter
2	Heating Mode	H=Heat
3	Heat Pump Water Heater	P=Water Pump
4	Nominal Heating Capacity	4.0=4.0kW;6.0=6.0kW;8.0=8kW;10=10kW;12=12kW;14=14kW;16=16kW
5	Type	S=Single
6	Compressor Type	I=DC Inverter
7	Refrigerant	R=R32
8	Power Supply	M=400V 3N~,50Hz; K=230V,~,50Hz
9	Series	3=series
10	Indoor and Outdoor Unit Code	I=Indoor unit; O=Outdoor unit

Model Line-Up

Model Name	Capacity		Power supply
	Heating[1],kW	Cooling[2],kW	
CH-HP8.0SIRM3	8	8.5	400V 3N~,50Hz
CH-HP10SIRM3	10	10	
CH-HP12SIRM3	12	11	
CH-HP14SIRM3	14	12.6	
CH-HP16SIRM3	15.5	13	
CH-HP12SIRK3	12	11	230V,~,50Hz
CH-HP14SIRK3	14	12.6	
CH-HP16SIRK3	15.5	13	

Notes

(a) [1]Capacities and power inputs are based on the following conditions:
Indoor Water Temperature 30°C/35°C, Outdoor Air Temperature 7°C DB/6°C WB;

(b) [2]Capacities and power inputs are based on the following conditions:
Indoor Water Temperature 23°C/18°C, Outdoor Air Temperature 35°C DB/24°C WB.

Operation Range

Mode	Heat Source Side Temperature (°C)	User Side Temperature (°C)
Heating	-25~35	20~60
Cooling	10~48	7~25
Water Heating	-25~45	40~80

4. Installation Example

CASE 1: Connecting Under-floor Coil for Heating and Cooling

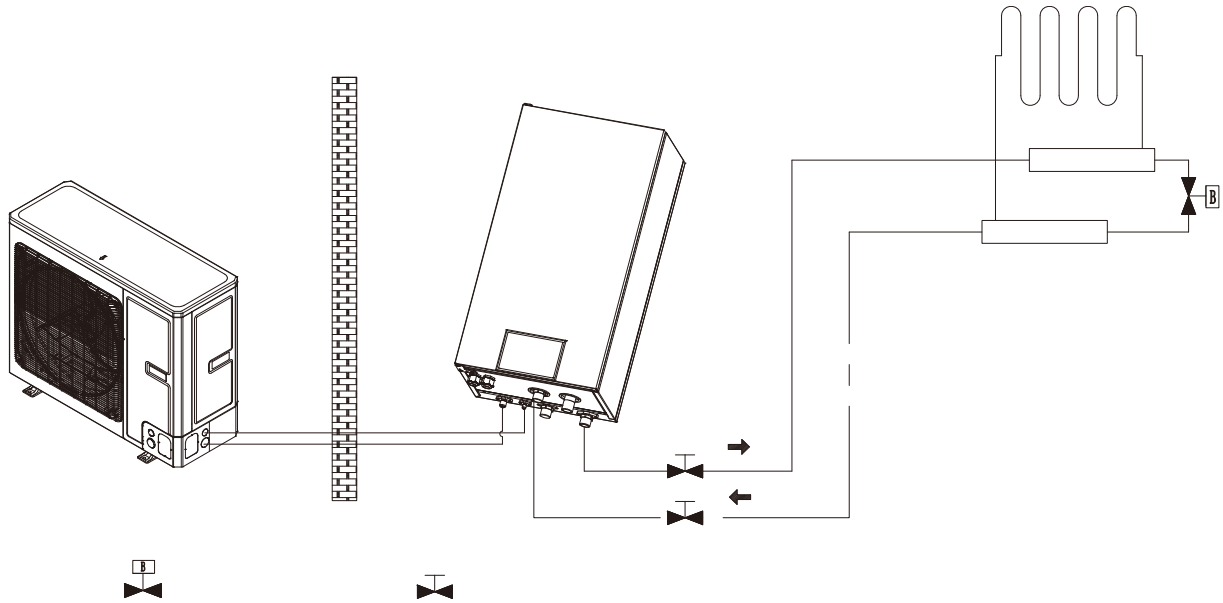

Notes

(a) The two-way valve is very important to prevent dew condensation on the floor while cooling mode;

(b) Type of thermostat and specification should be complied with installation of this manual;

(c) The bypass valve must be installed to secure enough water flow rate, and should be installed at the collector.

CASE 2: Connecting Sanitary Water Tank and Under-floor Coil

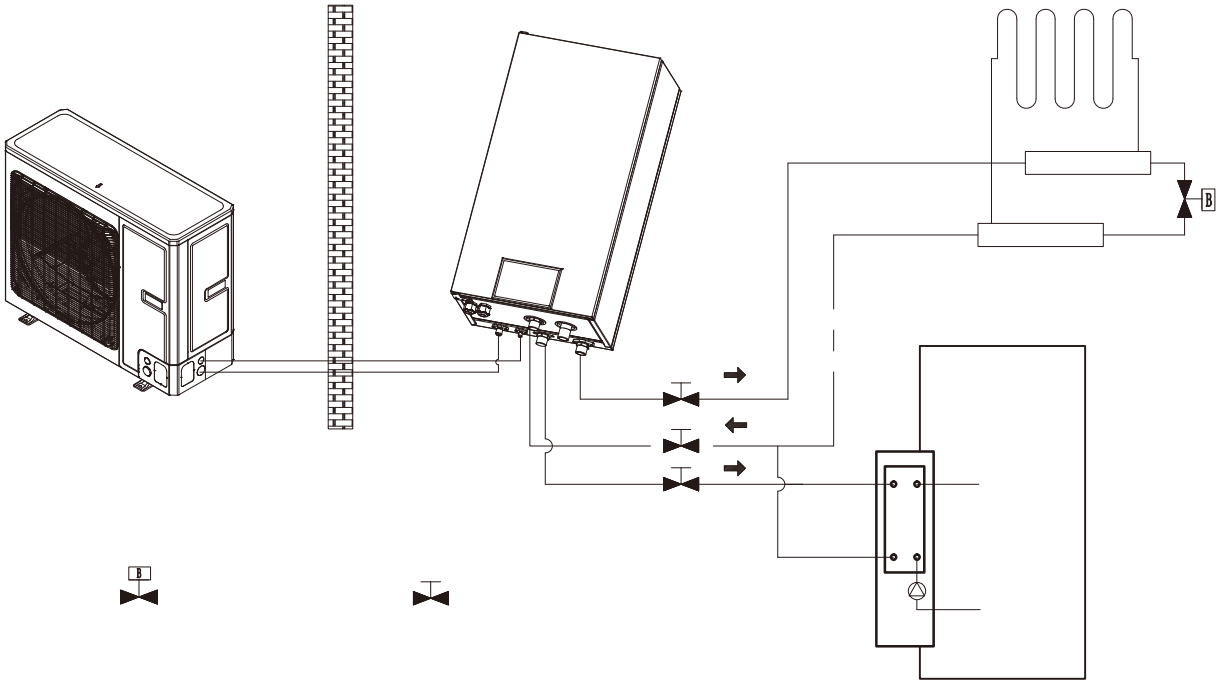

Notes

(a) The two-way valve is very important to prevent dew condensation on the floor while cooling mode

(b) In this case, three-way valve should be installed and should be complied with installation of this manual;

(c) Anitary water tank should be equipped with internal electric heater to secure enough heat energy in the very cold days.

CASE 3 : Connecting Sanitary Water Tank, Under-floor Coil and FCU

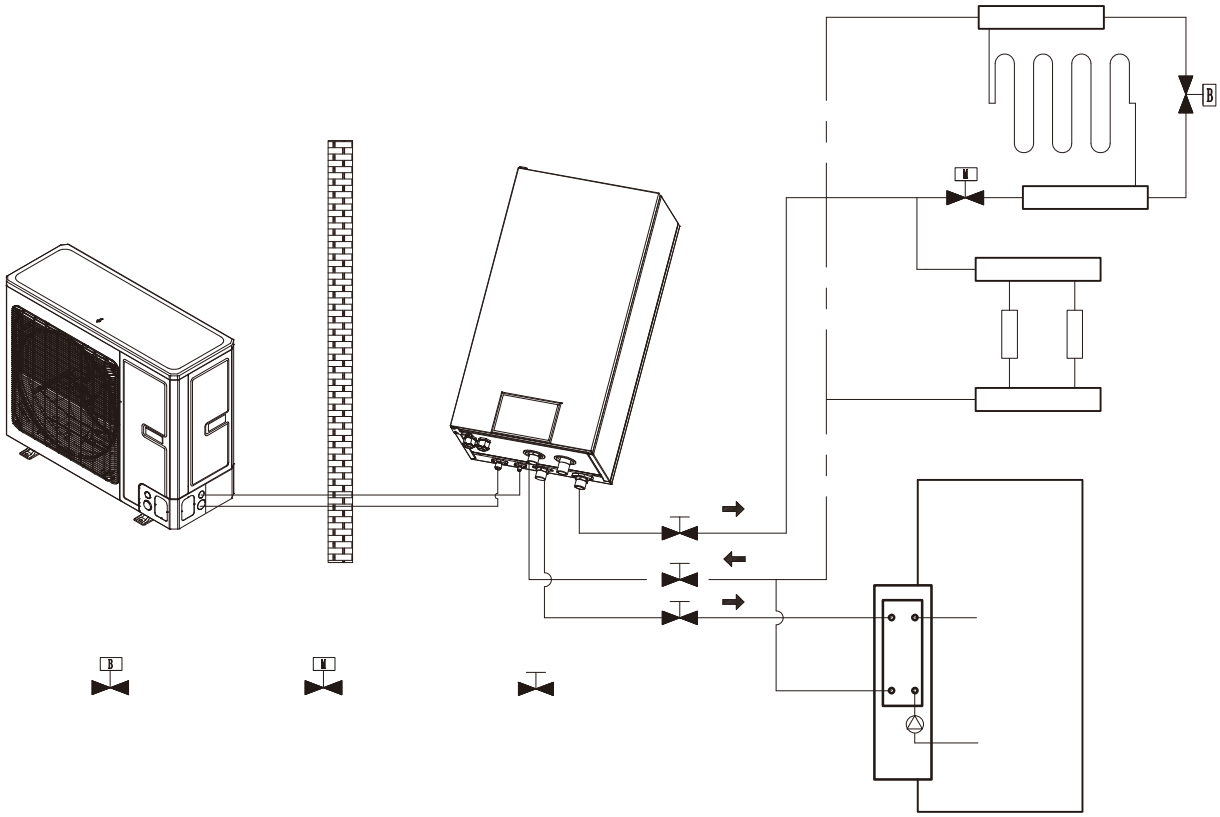

Notes

(a) The two-way valve is very important to prevent dew condensation on the floor and FCU while cooling mode

(b) In this case, three-way valve should be installed and should be complied with installation of this manual;

(c) Anitary water tank should be equipped with internal electric heater to secure enough heat energy in the very cold days.

(d) When the FCU and the underfloor coil are used at the same time, performance of the underfloor coil is satisfied firstly. When performance of the FCU is required, then “Floor config” should be set to “Without”.

5. Main Components

5.1 Indoor unit

(1) CH-HP8.0SIRM3(I), CH-HP10SIRM3(I), CH-HP12SIRM3(I), CH-HP14SIRM3(I), CH-HP16SIRM3(I), CH-HP12SIRK3(I), CH-HP14SIRK3(I), CH-HP16SIRK3(I)

External

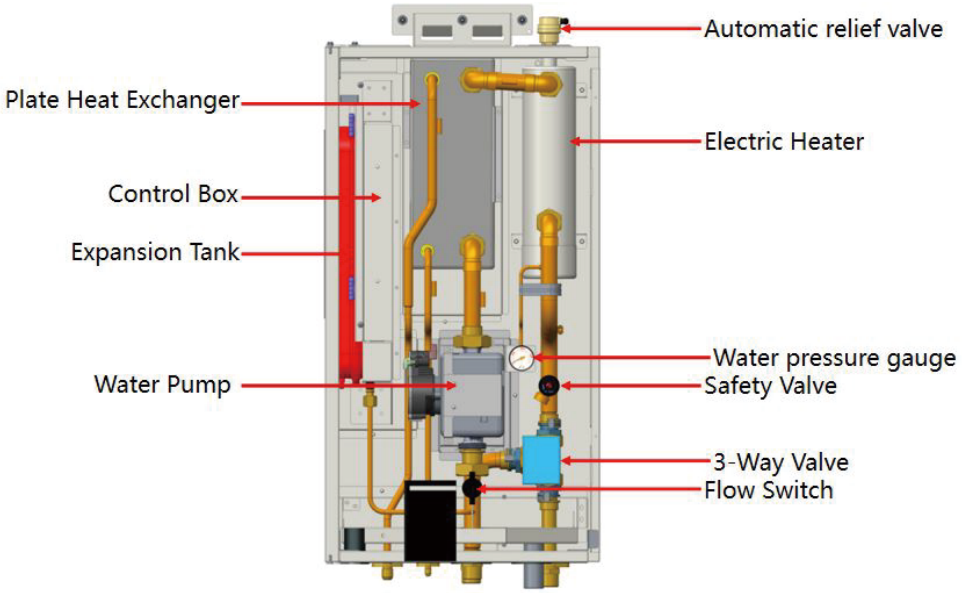

Internal

5.2 Outdoor unit

(1) CH-HP8.0SIRM3(O), CH-HP10SIRM3(O)

External

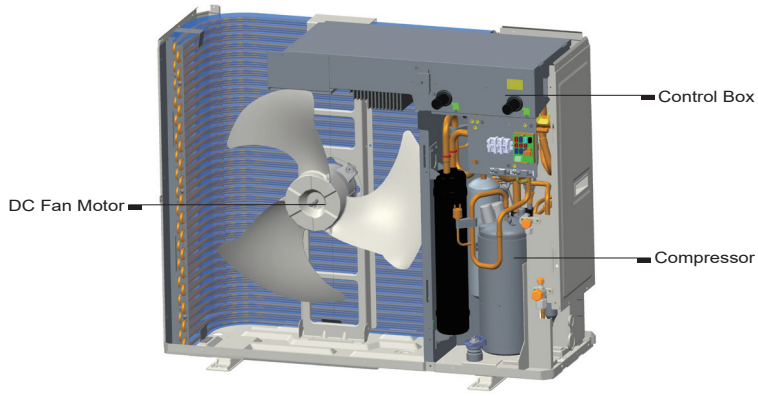

Internal

(2) CH-HP12SIRM3(O) , CH-HP14SIRM3(O), CH-HP16SIRM3(O), CH-HP12SIRK3(O) , CH-HP14SIRK3(O), CH-HP16SIRK3(O)

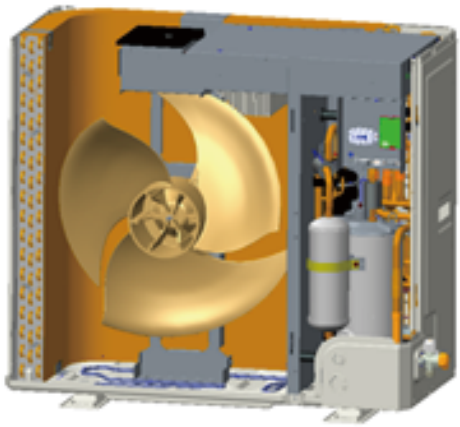

6. Installation Guideline of Outdoor Unit

6.1 Instruction to installation

(1) Installation of the unit must be in accordance with national and local safety codes.

(2) Installation quality will directly affect the normal use of the air conditioner unit. The user is prohibited from installation. Please contact your dealer after buying this machine. Professional installation workers will provide installation and test services according to installation manual.

(3) Do not connect to power until all installation work is completed.

6.2 Installation of outdoor unit

6.2.1 Select installation location of outdoor unit

(1) Outdoor unit must be installed on a firm and solid support.

(2) Outdoor unit shall be installed close to the indoor unit, hence to minimize the length and bends of cooling pipe.

(3) Avoid placing the outdoor unit under window or between two constructions, hence to prevent normal operating noise from entering the room.

(4) Air flow at inlet and outlet shall not be blocked.

(5) Install at a well-ventilated place, so that the machine can absorb and discharge sufficient air.

(6) Do not install at a place where flammable or explosive goods exist or a place subject to severe dust, salty fog and polluted air.

6.2.2 Outline dimension of outdoor unit

(1) CH-HP8.0SIRM3(O), CH-HP10SIRM3(O)

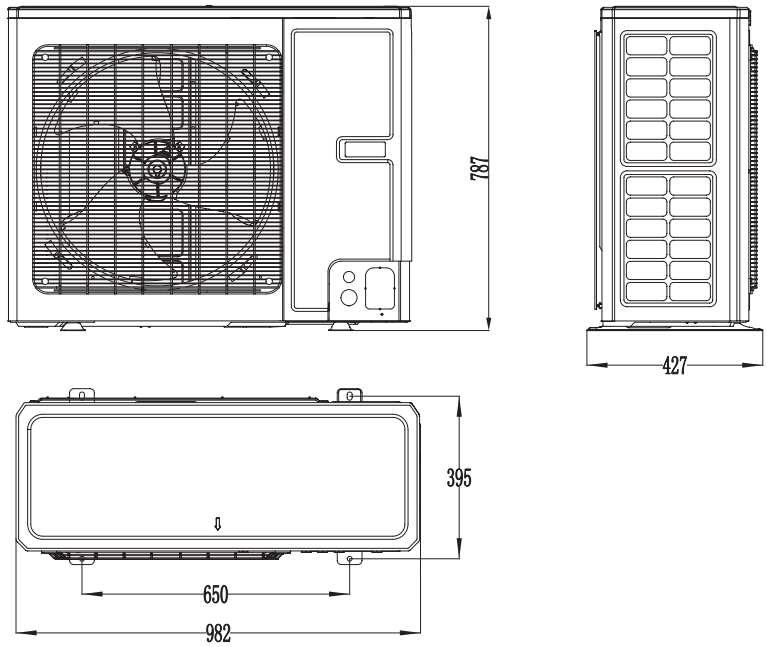

(2) CH-HP12SIRM3(O) , CH-HP14SIRM3(O), CH-HP16SIRM3(O), CH-HP12SIRK3(O) , CH-HP14SIRK3(O), CH-HP16SIRK3(O)

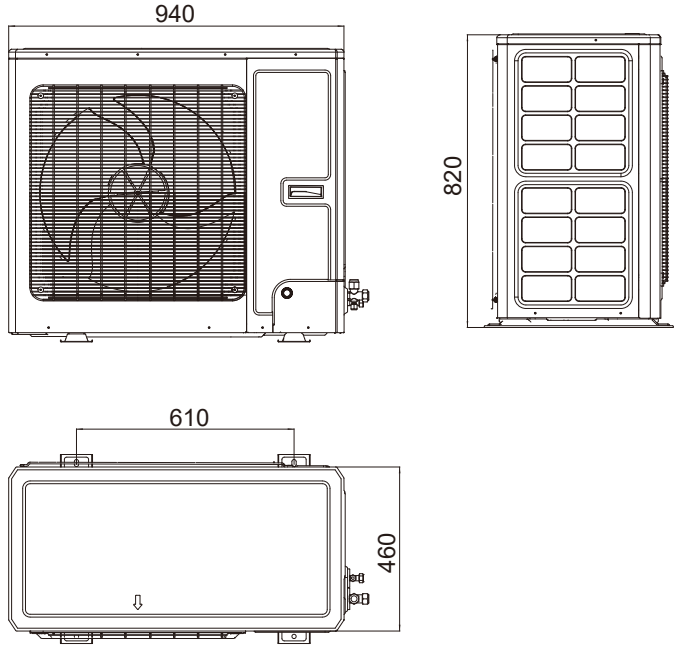

Description:

Unit: inch

No.	Name	Remarks	
1	Liquid-side Service Valve	1/4	CH-HP8.0SIRM3, CH-HP10SIRM3, CH-HP12SIRM3, CH-HP14SIRM3, CH-HP16SIRM3, CH-HP12SIRK3, CH-HP14SIRK3, CH-HP16SIRK3
2	Gas-side Service Valve	1/2	CH-HP8.0SIRM3, CH-HP10SIRM3,
3	Gas-side Service Valve	5/8	CH-HP12SIRM3, CH-HP14SIRM3, CH-HP16SIRM3, CH-HP12SIRK3, CH-HP14SIRK3, CH-HP16SIRK3
4	Handle	Used to cover or uncover the front case.	
5	Air discharge Grill	/	

6.2.3 Space requirements for installation

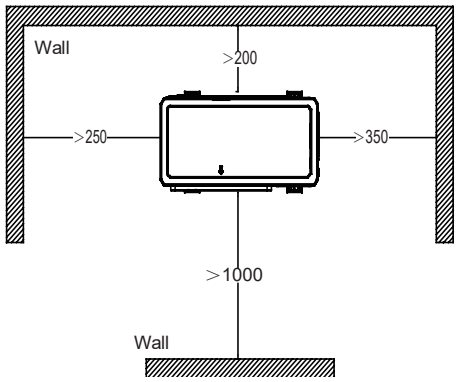

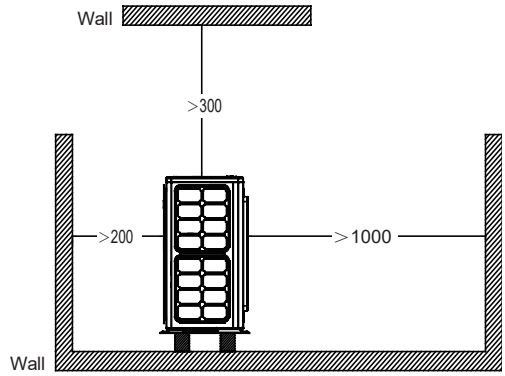

6.2.4 Precautions on installation of outdoor unit

(1) When moving outdoor unit, it is necessary to adopt 2 pieces of long enough rope to hand the unit from 4 directions. Included angle between the rope when hanging and moving must be 40℃ below to prevent center of the unit from moving.

(2) Adopt M12 bolts components to tighten feet and under frame when installing.

(3) Outdoor unit should be installed on concrete base that is 10cm height.

(4) Requirements on installation space dimension of unit's bodies are shown in following drawing.

(5) Outdoor unit must be lifted by using designated lifting hole. Take care to protect the unit during lift. To avoid rusting, do not knock the metal parts.

(6) Note that when release and refix the screw of the clasper, your hand should support the panal.And then,after connected power cable,please ensure using the elastic trip of accessory to tighten with the pipe.

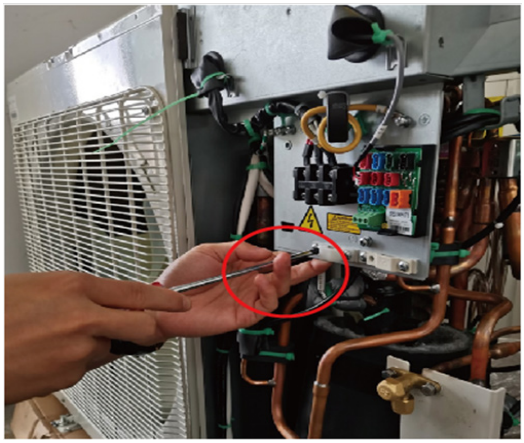

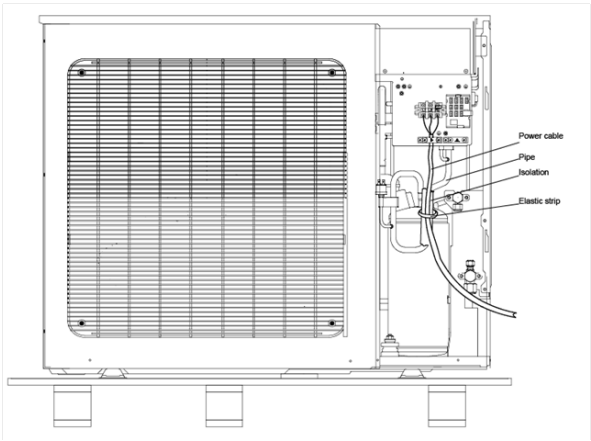

7. Installation of Indoor Unit

7.1 Selection of the installation location for the indoor unit

(1) Avoid direct sunshine.

(2) Ensure the hanger rod, ceiling and building structure have sufficient strength to support the weight of air conditioner unit.

(3) Drainage pipe is easy to connect out.

(4) Indoor and outdoor connection pipes are easy to go outdoors.

(5) Do not install at a place where inflammable or explosive goods exist or inflammable or explosive gas may leak.

(6) Do not install at a place subject to corrosive gas, severe dust, salty fog, smoke or heavy moisture.

7.2 Space requirements for installation

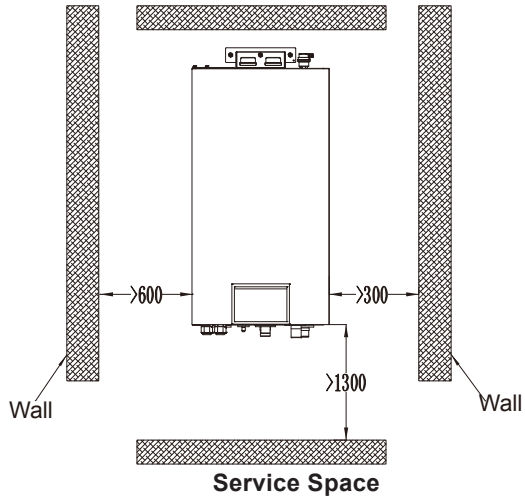

7.3 Installation process of indoor unit

Step1:Drill holes on the wall in the following drawing.

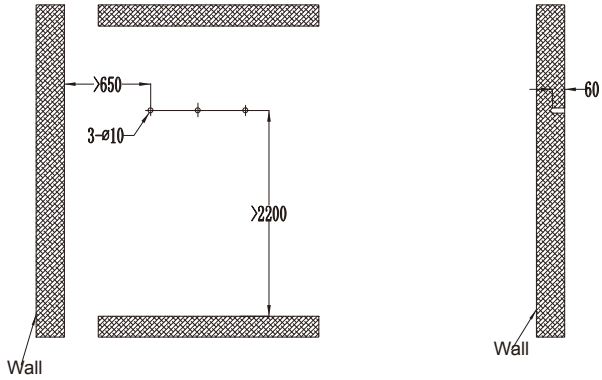

Step2:Install expansion bolts and forecasted pannel.

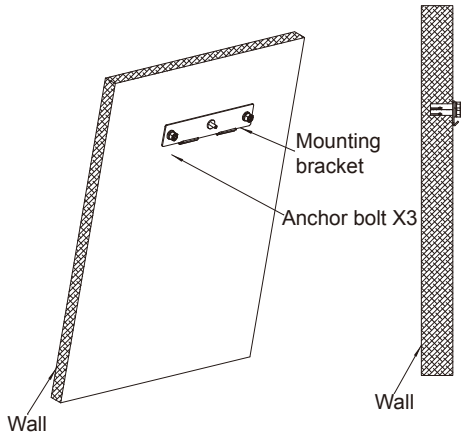

Step3: Attaching indoor unit to the wall.

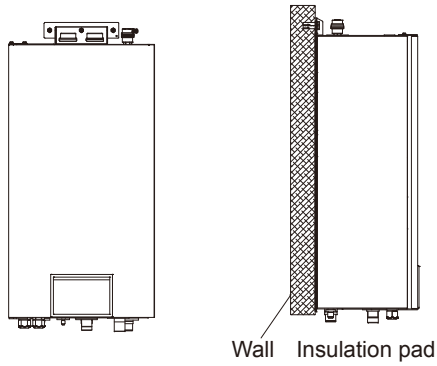

⚠ NOTE

- While lifting the indoor unit, at least two persons should be joined. Weight of the indoor unit is more than 50kg.
- The indoor unit must be installed vertically to the ground and fastened securely.
- Before commissioning, the dust-proof cap of the automatic relief valve must be loosened, other than entirely being removed away, and it can be tightened in case that it leaks.

7.4 Outline dimension of indoor unit

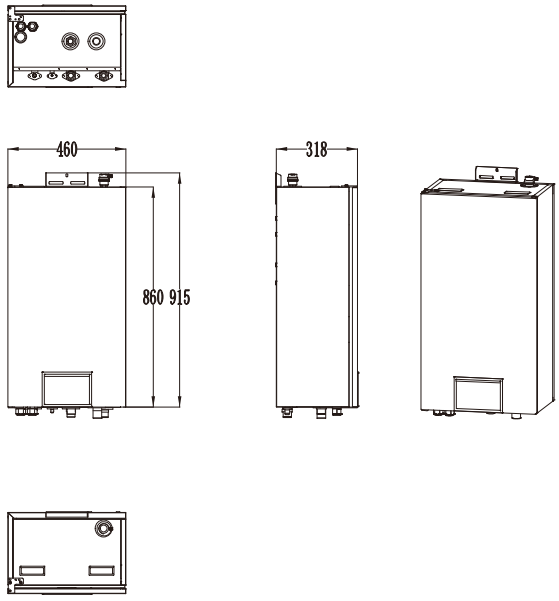

Description:

Unit: inch

No.	Name	Remarks	
1	Leaving Water Pipe	1″Male BSP	
2	Returning Water Pipe	1″Male BSP	
3	Liquid-side Pipe	1/4	CH-HP8.0SIRM3, CH-HP10SIRM3, CH-HP12SIRM3 CH-HP14SIRM3, CH-HP16SIRM3, CH-HP12SIRK3, CH-HP14SIRK3, CH-HP16SIRK3
4	Gas-side Pipe	1/2	CH-HP8.0SIRM3, CH-HP10SIRM3
5	Gas-side Pipe	5/8	CH-HP12SIRM3, CH-HP14SIRM3, CH-HP16SIRM3, CH-HP12SIRK3, CH-HP14SIRK3, CH-HP16SIRK3,

7.5 Precautions on installation of indoor unit

(1) Indoor unit shall be vertically mounted on the wall of the room with expansion bolt.

(2) Keep the indoor unit away from heat sources like heat sink and so on in the room as much as possible.

(3) Keep the indoor unit as close as possible to outdoor unit. Level distance between connection pipes cannot exceed 25m (8.0~10kW) and vertical distance cannot exceed 15m (4~10kW).

7.6 Water volume and pump capacity (with pump)

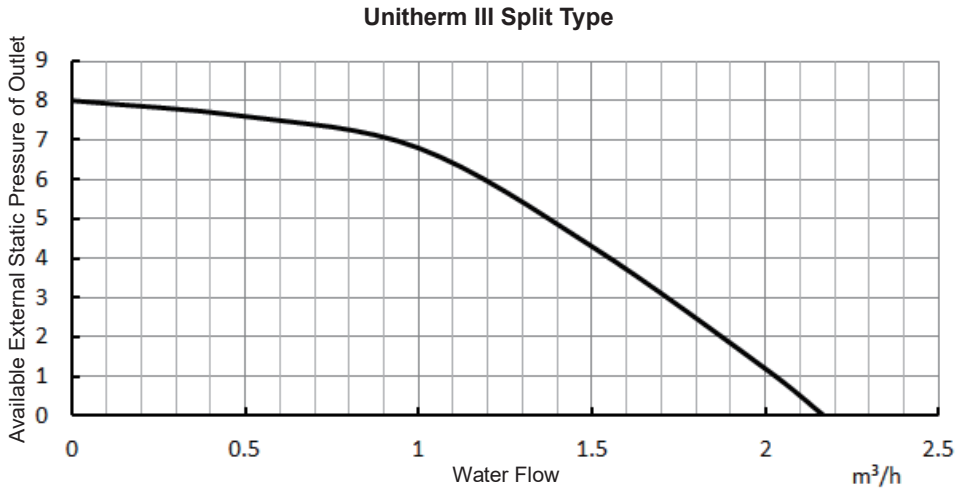

Note

See the curve above for the maximum external static pressure. The water pump is of variable frequency. And during operation, the water pump will adjust its output based on the actual load.

7.7 Water volume and expansion vessel pressure

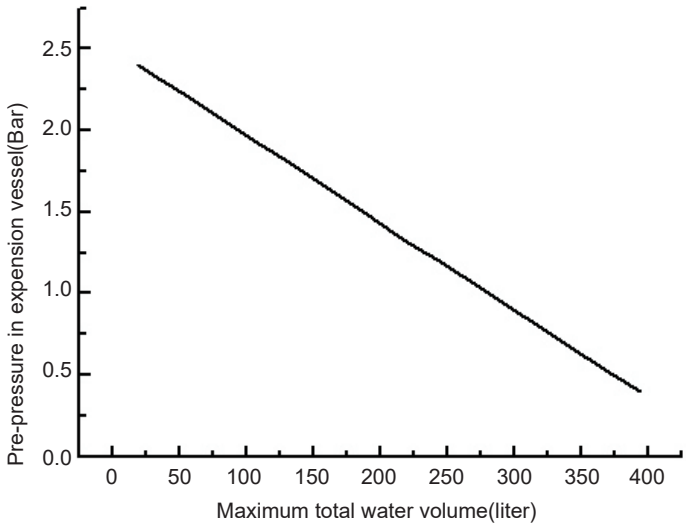

Notes

(a) The expansion vessel is 10 liter and 1bar pre-pressurized;

(b) Total water volume of 280 liter is default; if total water is changed because of installation condition, the pre-pressure should be adjusted to secure proper operation. If the indoor unit is located at the highest position, adjustment is not required;

(c) Minimum total water volume is 20 liter;

(d) To adjust pre-pressure, use nitrogen gas by certificated installer.

7.8 Selection of expansion vessel

Formula:

$$v=\frac{c\cdot e}{1-\frac{1+p_1}{1+p_2}}$$

V--- Volume of expansion vessel

C--- Total water volume

P_1--- Pre-set pressure of expansion vessel

P_2-- The highest pressure during running of the system (that is the action pressure of safety valve.)

e---The expansion factor of water (the difference between the expansion factor of the original water temperature and that of highest water temperature.)

Water expansion factor in different temperature	
Temperature(°C)	**Expansion factor e**
0	0.00013
4	0
10	0.00027
20	0.00177
30	0.00435
40	0.00782
45	0.0099
50	0.0121
55	0.0145
60	0.0171
65	0.0198
70	0.0227
75	0.0258
80	0.029
85	0.0324
90	0.0359
95	0.0396
100	0.0434

8. Connection of Pipeline

8.1 Connection of outlet pipe for indoor & outdoor unit

(1) Align the expansion end of copper pipe with the center of threaded joint. Tighten the flaring nuts with your hands.

(2) Tighten the flaring nuts with torque wrench until you hear a “click”.

(3) Bend of fitting pipe shall not be too low; otherwise the fitting pipe might crack. Please use pipe bender when bending the fitting pipe.

(4) When connecting outdoor and indoor unit, never pull the big and small joint of indoor unit with force, so as to prevent the tubes of indoor unit from cracking and causing leakage.

(5) Connecting pipe shall be supported by a rack without transmitting its weight to other units.

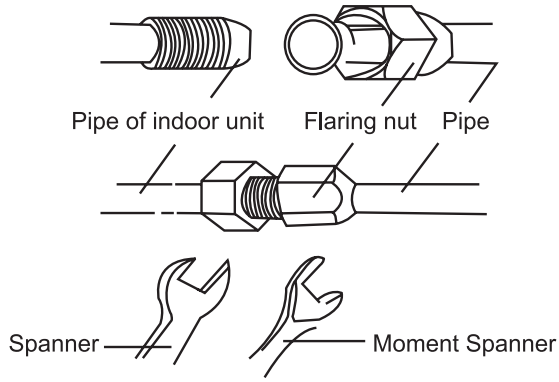

8.2 Installation of protective layer on connection pipe

(1) To avoid condensate dew or water leakage on connecting pipe, the air pipe and liquid pipe must be wrapped with heat preservation material and adhesive pipe for insulation from the air.

(2) The joints on indoor unit and outdoor unit must be wrapped with heat preservation materials and have no clearance against the wall surface of indoor unit and outdoor unit.

(3) Wrap the pipe with tapes.

- Use the adhesive tape to wrap the connecting pipe and cable into one bundle. To prevent condensate water from overflowing out of the drainpipe, the drainpipe shall be separated from connecting pipe and cable.
- Wrap the heat preservation tape so that each ring of tape shall press half of the previous ring.
- Fix the wrapped pipe onto the wall with pipe clamp.
- Do not wrap the protective tape too tightly, as this will decrease the heat insulation performance.
- After completing the protection work and wrapping the pipe properly, close the wall holes with sealing materials.

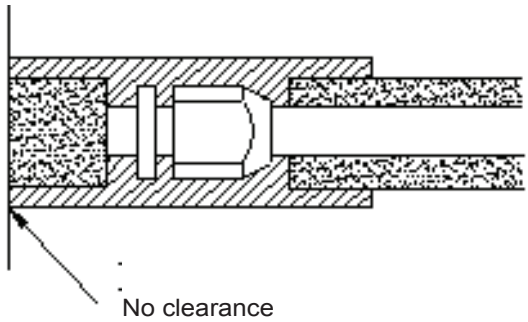

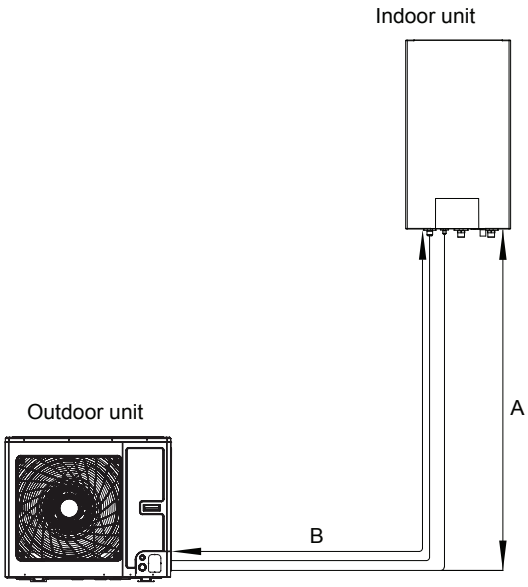

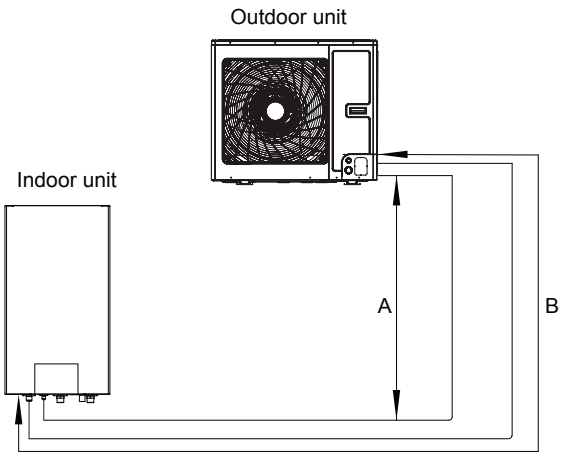

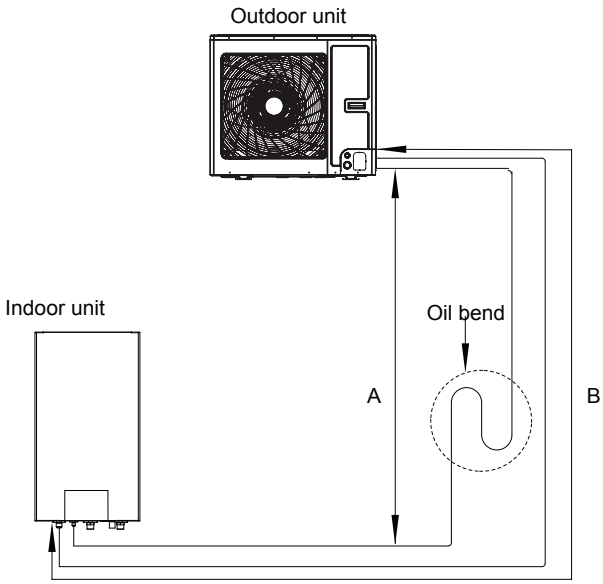

Model	Pipe size (Diameter:Φ)		Length B		Elevation A		Additional refrigerant
	gas	Liquid	Standard	Max.	Standard	Max.	
CH-HP8.0SIRM3	1/2"	1/4"	5m	15m	0m	15m	0g/m
CH-HP10SIRM3	1/2"	1/4"	5m	15m	0m	15m	0g/m
CH-HP12SIRM3	5/8"	1/4"	5m	15m	0m	15m	0g/m
CH-HP14SIRM3	5/8"	1/4"	5m	15m	0m	15m	0g/m
CH-HP16SIRM3	5/8"	1/4"	5m	15m	0m	15m	0g/m
CH-HP12SIRK3	5/8"	1/4"	5m	15m	0m	15m	0g/m
CH-HP14SIRK3	5/8"	1/4"	5m	15m	0m	15m	0g/m
CH-HP16SIRK3	5/8"	1/4"	5m	15m	0m	15m	0g/m

Notes

(a) the refrigerant charge for the 8/10kW model is as high as 1.84kg. It is the allowed maximum charge for the split type unit. If more charge is required, the indoor ventilation equipment must be equipped. Therefore, in the case of increasing the length of the connecting tube, there is no need to add refrigerant to the unit.

9. Remote Air Temperature Sensor

Front side

Back side

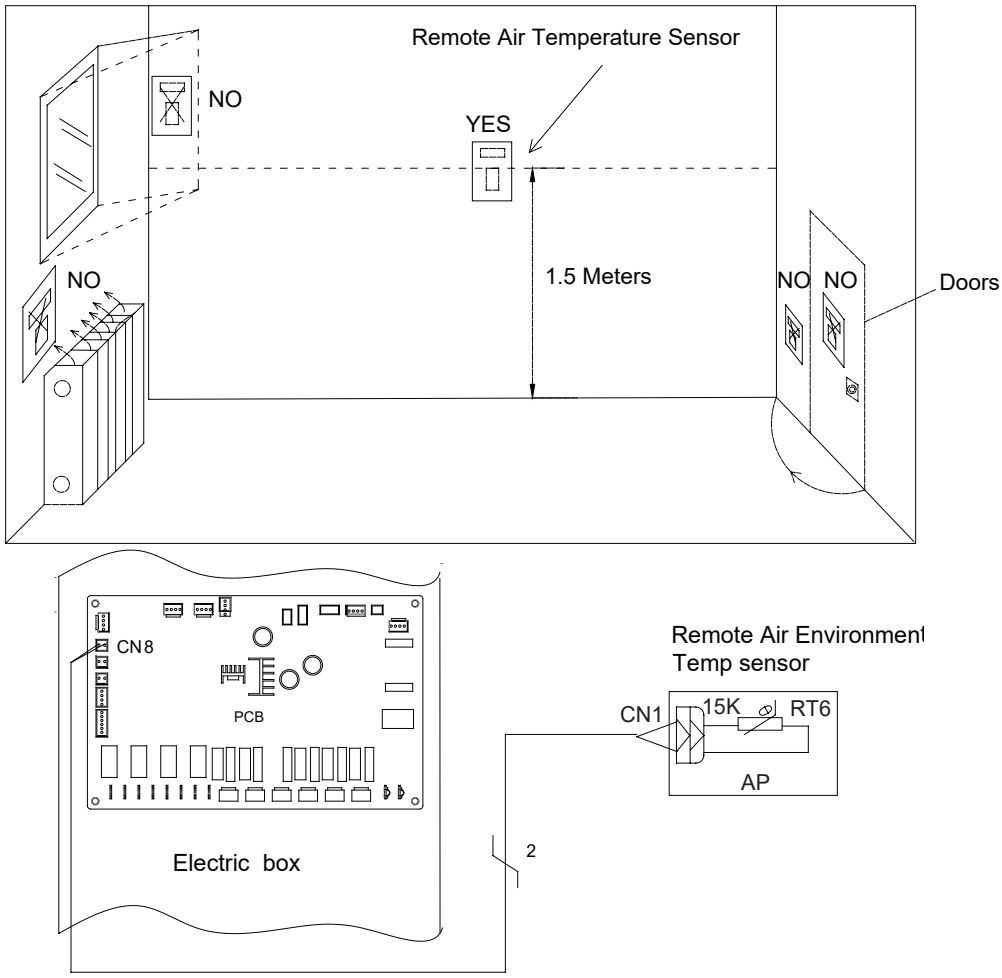

Notes

(a) Distance between the indoor unit and the remote air temperature sensor should be less than 15m due to length of the connection cable of remote air temperature sensor;

(b) Height from floor is approximately 1.5m;

(c) Remote air temperature sensor cannot be located where the area may be hidden when door is open;

(d) Remote air temperature sensor cannot be located where external thermal influence may be applied;

(e) Remote air temperature sensor should be installed where space heating is mainly applied;

(f) After the remote air temperature sensor is installed, it should be set to “With” through the wired controller so as to set the remote air temperature to the control point.

10. Thermostat

Installation of the thermostat is very similar to that of the remote air temperature sensor.

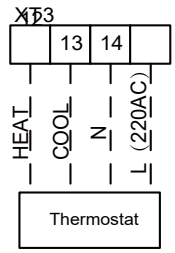

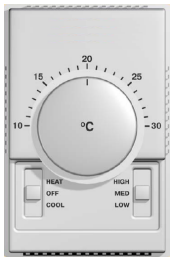

How to Wire Thermostat

(1) Uncover the front cover of indoor unit and open the control box;

(2) Identify the power specification of the thermostat, if it is 220V, find terminal block XT3 as NO.12~15;

(3) If it is the heating/cooling thermostat, please connect wire as per the figure above.

⚠ NOTE

- 220V power supply can be provided to the thermostat by the Unitherm III heat pump.
- Setting temperature by the thermostat(heating or cooling) should be within the temperature range of the product ;
- For other constrains, please refer to previous pages about the remote air temperature sensor;
- Do not connect external electric loads. Wire 220V AC should be used only for the electric thermostat;
- Never connect external electric loads such as valves, fan coil units, etc. If connected, the mainboard of the unit can be seriously damaged;
- Installation of the thermostat is very similar to that of the remote air temperature sensor.

11. 2-Way Valve

The role of 2-way valve 1 is to control the water flow into the underfloor loop. When “Floor Config” is set to “With” for either cooling or heating operation, it will keep open. When “Floor Config” is set to “ Without”, it will keep closed.

General Information

Type	Power	Operating Mode	Supported
		Closing water flow	Yes
		Opening water flow	Yes
NC 2-wire	230V 50Hz ~AC	Closing water flow	Yes
		Opening water flow	Yes

(1) Normal Open type. When electric power is NOT supplied, the valve is open. (When electric power is supplied, the valve is closed.)

(2) Normal Closed type. When electric power is NOT supplied, the valve is closed. (When electric power is supplied, the valve is open.)

(3) How to Wire 2-Way Valve:

Follow steps below to wire the 2-way valve.

Step 1. Uncover the front cover of the unit and open the control box.

Step 2. Find the terminal block and connect wires as below.

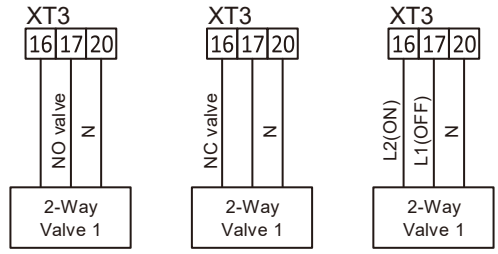

⚠ WARNING

- Normal Open type should be connected to wire (OFF) and wire (N) for valve closing in cooling mode.
- Normal Closed type should be connected to wire (ON) and wire (N) for valve closing in cooling mode.
  (ON) : Line signal (for Normal Open type) from PCB to 2-way valve
  (OFF) : Line signal (for Normal Closed type) from PCB to 2-way valve
  (N) : Neutral signal from PCB to 2-way valve

12. 3-Way Valve

The 3-way valve 2 is required for the sanitary water tank. Its role is flow switching between the under floor heating loop and the water tank heating loop.

General Information

Type	Power	Operating Mode	Supported
SPDT 3-wire	230V 50Hz ~AC	Selecting “Flow A” between “Flow A” and “Flow B”	Yes
		Selecting “Flow B” between “Flow B” and “Flow A”	Yes

(1) SPDT = Single Pole Double Throw. Three wires consist of Live1 (for selecting Flow B), and Neutral (for common).

(2) Flow A means 'water flow from the indoor unit to under floor water circuit'.

(3) Flow B means 'water flow from the indoor unit to sanitary water tank'.

Follow steps below to wire the 3-way valve:

Follow below procedures Step 1 ~ Step 2.

Step 1. Uncover front cover of the unit and open the control box.

Step 2. Find terminal block and connect wires as below.

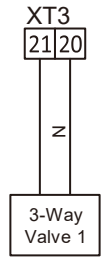

⚠ WARNING

- The 3-way valve should select water tank loop when electric power is supplied to wire (OFF) and wire (N).
- The 3-way valve should select under floor loop when electric power is supplied to wire (ON) and wire (N).
- (ON): Line signal (Water tank heating) from the main board to the 3-way valve
- (OFF): Line signal (Under floor heating) from the main board to the 3-way valve
- (N): Neutral signal from the main board to the 3-way valve

13. Other Auxiliary Heat Sources

Other thermal is allowed for the equipment and controlled in such a way that the mainboard will output 230V when outdoor temperature is lower than the set point for startup of the aother thermaluxiliary heat source.

Note: Other thermal and Optional Electric Heater CANNOT be installed at the same time.

Step 1. Other thermal installation

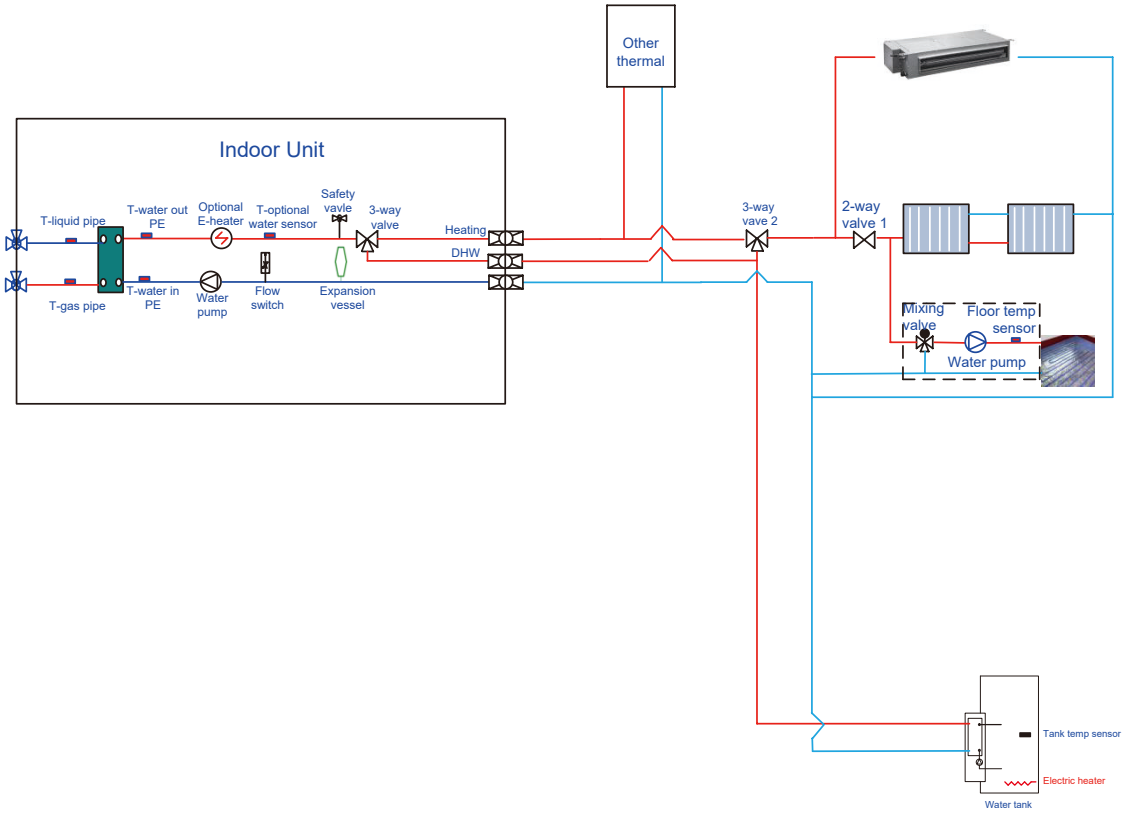

Step 2. Electric wiring work

Other thermal L and N connect to XT3~1,2

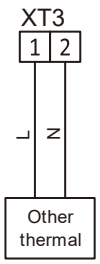

Step 3. Wired controller setting

Other thermal should be selected "with" if necessarily from COMMISION → FUNCTION,then set switch on (outdoor)temperature and control logic(1/2/3).

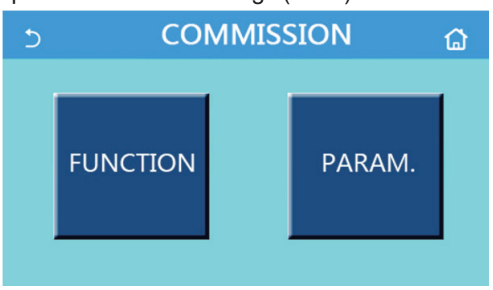

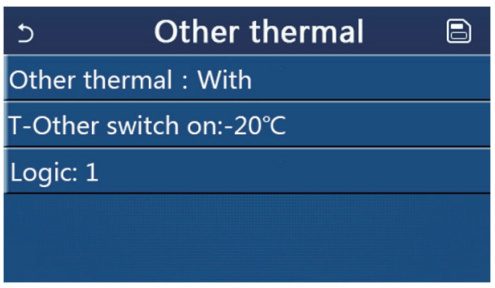

14. Gate-controller

If there is gate control function, installation guide follow as:

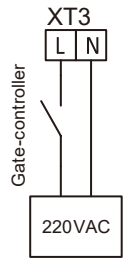

15. Charging and Discharging of Refrigerant

(1) Before shipped out from manufacturer, the outdoor unit has been filled with refrigerant. Additional refrigerant may be filled when carrying out site connection of pipelines.

(2) Check the liquid valve and the gas valve of the outdoor unit. The valves shall be completely shut off.

(3) Connect a vacuum pump to the liquid valve and the gas valve of the outdoor unit to remove air from the inside of the indoor unit and the connecting pipe. Refer to the following figure:

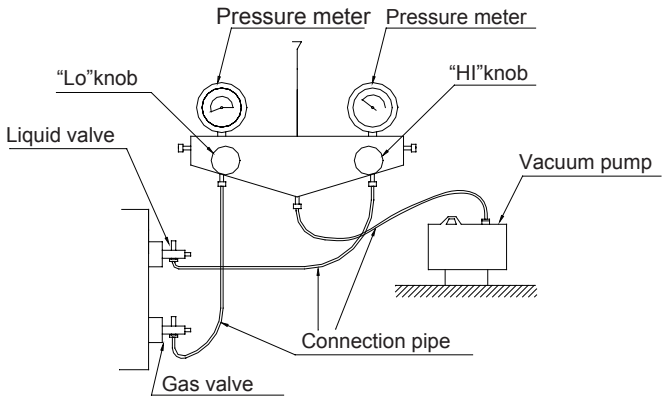

(4) After confirming that there is no leakage from the system, when the compressor is not in operation, charge additional R32 working fluid with specified amount to the unit through the filling opening of the liquid pipe valve of the outdoor unit.

- Be sure to charge the specified amount of refrigerant in liquid state to the liquid pipe. Since this refrigerant is a mixed refrigerant, adding it in gas form may cause the refrigerant composition to change, preventing normal operation.
- Before charging, check whether the refrigerant cylinder is equipped with a siphon tube or not.

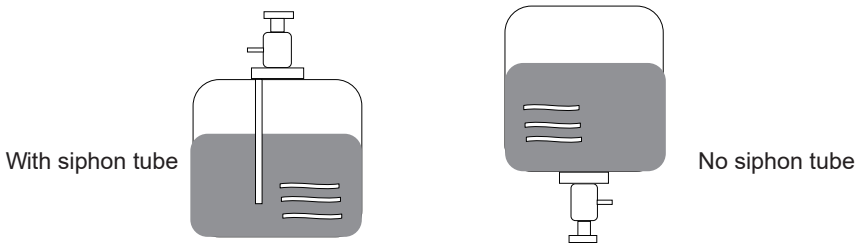

⚠ WARNING

• When charging is interrupted or finished, reinspect the unit but do not let the compressor run into operation.

⚠ NOTE

• Do not use mixture of refrigerant vapor and air or oxygen for pressurizing for fear of explosion.

16. Refrigerant Collecting

When relocating or disposing of the indoor/outdoor unit, pump down the system following the procedure below so that no refrigerant is released into the atmosphere.

(1) Turn off the power supply (circuit breaker).

(2) Connect the low-pressure valve on the gauge manifold to the charge plug (lowpressure side) on the outdoor unit.

(3) Close the liquid stop valve completely.

(4) Supply power (circuit breaker).

Start-up of the indoor-outdoor communication takes about 3 minutes after the power (circuit breaker) is turned on. Start the pump-down operation 3 to 4 minutes after the power (circuit breaker) is turned on.

(5) Perform the refrigerant collecting operation.

At the commissioning parameter setting page, by touching “Refri. recovery”, it will access to the refrigerant recovery page.

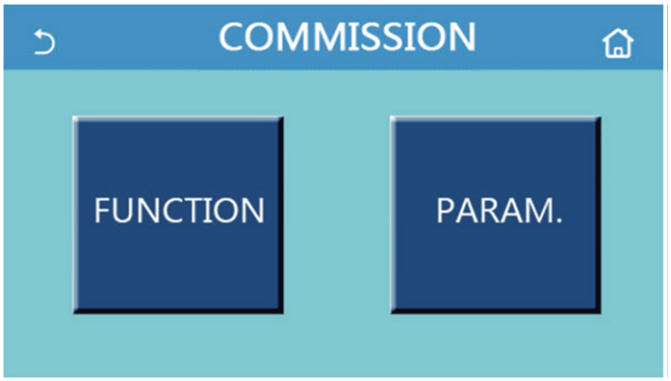

(6) Fully close the ball valve on the gas pipe side of the outdoor unit when the pressure gauge on the gauge manifold shows 0.05 to 0 MPa [Gauge] (approx. 0.5 to 0 kgf/cm²) and quickly stop the air conditioner. When “Refri. recovery” is set to “On”, the control panel will go back to the home page. At this time, any touch operation except ON/OFF will get no response, with a prompt dialog box popping up, saying “The refrigerant recovery is running!” By touching ON/OFF, refrigerant recovery will quit.

(7) Turn off the power supply (circuit breaker), remove the gauge manifold, and then disconnect the refrigerant pipes.

⚠ WARNING

- When pumping down the refrigerant, stop the compressor before disconnecting the refrigerant pipes.
- If the refrigerant pipes are disconnected while the compressor is operating and the stop valve (ball valve) is open, the pressure in the refrigeration cycle could become extremely high if air is drawn in, causing the pipes to burst, personal injury, etc.

17. Handling of the Unit

During installing or moving the unit, other substances except refrigerant cannot get into the refrigerant pipe and there shall not be air remained in the pipe.

If air or other substance gets into the pipe, system pressure will increase and compressor will be damaged.

Do not charge refrigerant of other type into the unit during installing or moving. Otherwise, it may cause poor operation, malfunction, mechanical failure, or even serious safety accident.

If the refrigerant shall be recycled during moving or maintaining, pressure meter must be used. Set the unit in cooling mode and close the valve at high pressure side (liquid valve) completely. When the reading of pressure meter ranges 0~0.05MPa (about 30s~40s), close the valve at high pressure side (gas valve) completely, turn off the unit and cut off power supply.

If refrigerant recycle time is too long, air may get into the system. In this case, system pressure will increase and compressor will be damaged.

During recycling refrigerant, make sure the liquid valve and gas valve are closed completely, and the power supply is cut off before disassembling the connection pipe.

If connection pipe is disassembled when the compressor is still operating, air may get into the system. In this case, system pressure will increase and compressor will be damaged.

During installing the unit, make sure the connection pipe is connected properly before starting the compressor.

If the compressor is started before finishing connection of connection and when the cut-off valve is opened, air may get into the system. In this case, system pressure will increase and compressor will be damaged.

The indoor unit and outdoor unit shall be connected properly with required wire. The wiring terminal shall be secured properly without affecting by exterior force directly.

If the wire is not connected properly or the wiring terminal is not secured properly, fire hazard may be caused.

The wire cannot be refit or reconnected in the middle.

When the length of connection wire is not sufficient, please contact the appointed after-sales service center to purchase a specialized wire with sufficient length.

18. Installation of Insulated Water Tank

18.1 Installation measure

The insulated water tank should be installed and keep levelly within 5m and vertically within 3m from the indoor unit. It can be installed in the room.

Standing water tank must be installed vertically with the bottom on the ground, never suspended. Installation place must be firm enough and the water tank should be fixed on the wall with bolts to avoid vibration, as shown in the following figure. Weight capacity of water tank during installation should also be considered.

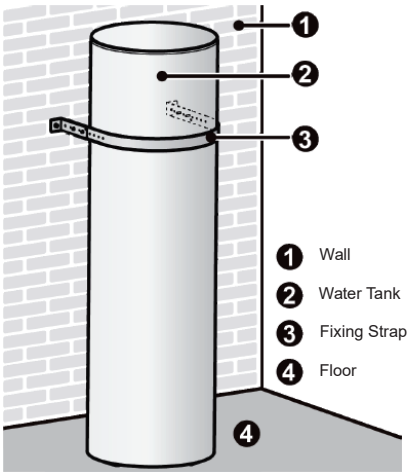

The minimum clearance from the water tank to combustible surface must be 500mm.

There should be water pipe, hot water joint and floor drain near the water tank in favor of water replenishment, hot water supply and drainage of water tank.

Connection of inlet/outlet waterway: Connect the safety check valve attached with the unit (with the arrow on it pointing at the water tank) with the water inlet of water tank with PPR pipe according to the following figure, sealing with unsintered tape. The other end of the safety check valve should connect with tap water joint. Connect the hot water pipe and water outlet of water tank with PPR pipe.

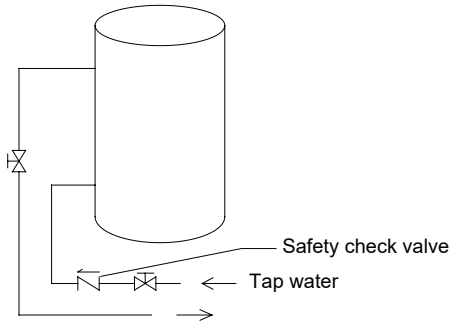

Note

(a) For safe use of water, water outlet/inlet of water tank must connect with a certain length of PPR pipe ,L ≥70×R2(cm, R is inside radius of the pipe). Moreover, heat preservation should be conducted and metal pipe cannot be used. For the first use, water tank must be full of water before the power is on.

18.2 Outline dimension and parameter of water tank

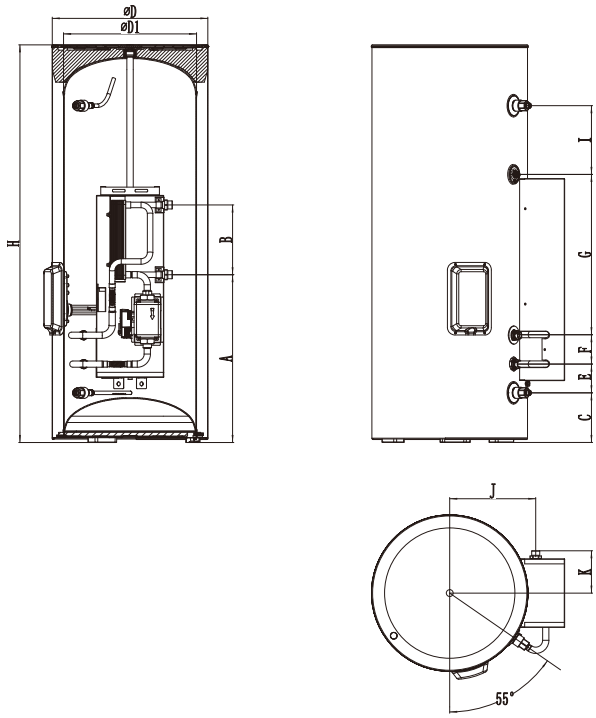

Model	SWT300P3EM
Litre	300L
D(mm)	620
D1(mm)	530
H(mm)	1585
A(mm)	669
B(mm)	278
C(mm)	198
E(mm)	115
F(mm)	117
G(mm)	639
I(mm)	274
J(mm)	343
K(mm)	169

Model		SWT300P3EM
Outline (Diameter×H) (mm)		Φ620×1585
Package (W×D×H)(mm)		740×940×1705
Net weight	kg	103
Gross weight	kg	131

Joints Dimension	
Description	Joint pipe thread
Hot water outlet of water tank	3/4″Female BSP
Circulating water inlet/outlet of water tank	3/4″Female BSP
Cooling water inlet of water tank	3/4″Female BSP
Pipe joint	3/4″Female BSP

18.3 Connection of waterway system

(1) If connection between water tank and indoor unit should be through the wall, drill a hole φ70 for pass of circulating water pipe. It is unnecessary if the hole is not needed.

(2) Preparation of pipelines: Circulating water outlet/inlet pipe must be hot water pipe, PPR pipe with nominal out diameter of dn25 and S2.5 series (wall thickness of 4.2mm) being recommended. Cooling water inlet pipe and hot water outlet pipe of water tank should also be hot water pipe, PPR pipe with nominal out diameter of dn20 and S2.5 series (wall thickness of 3.4mm) being recommended. If other insulated pipes are adopted, refer to the above dimensions for out diameter and wall thickness.

(3) Installation of circulating water inlet/outlet pipes: connect the water inlet of the unit with circulating outlet of water tank and water outlet of unit with circulating inlet of water tank.

(4) Installation of water inlet/outlet pipes of the water tank: safety check valve, filter and cut-off valve must be installed for the water inlet pipe according to the installation sketch of the unit. At least a cut-off valve is needed for the water outlet pipe.

(5) Installation of blow-off pipes at the bottom of water tank: connect a piece of PPR pipe with drainage outlet to floor drain. A cut-off valve must be installed in the middle of the drainage pipe and at the place where it is easy to be operated by the users.

(6) After connection of all waterway pipelines, perform the leakage test firstly. After that, bind up the water pipes, water temp sensor and wires with wrapping tapes attached with the unit.

(7) Refer to Installation Sketch of the Unit for details.

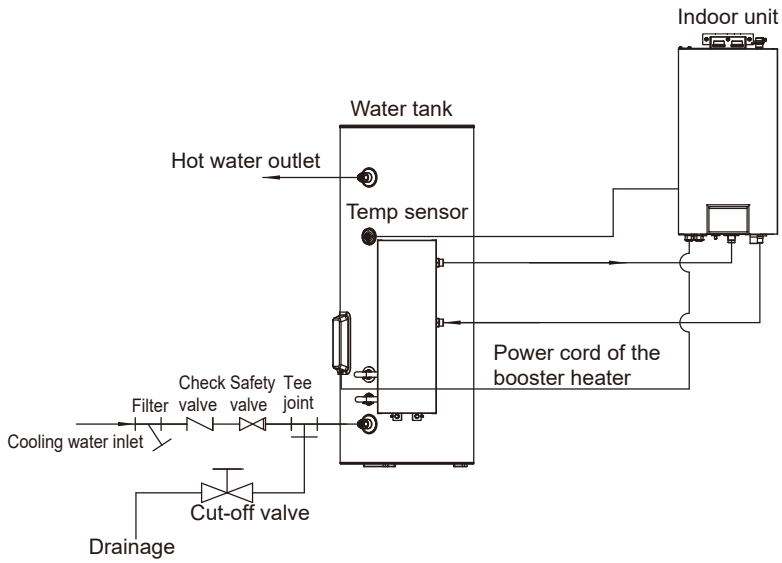

Description	Joint pipe thread
Circulating water inlet/outlet of main unit	1″Male BSP
Cooling water inlet of water tank	3/4″Female BSP
Circulating water inlet/outlet of water tank	3/4″Female BSP
Hot water outlet of water tank	3/4″Female BSP

Code	Name	QTY.	Function
01842800004P01	Retaining Plate Sub-Assy	2	Fix the water tank to the wall
70210087	Bolt M6X16	4	/
70110066	Swell Screw M8X60	2	/
0738280101	Relief Valve 1/2	1	/
035033000012	Water Pipe Connector	1	Connect the water pipe and Water inlet pipe sub-assy
06332800003	Nut	1	Install on the 3way connector
75042805	Gasket	2	Sealing function, see below blue circle
030059000120	Water inlet pipe sub-assy	2	/
05332800002	Drainage Pipe(Rubber)	1	The drainage pipe using for the relief valve to drainage the water
70814016	Pipe Hoop φ13	1	Fix the drainage pipe
2690280000502	Extruded strip	1	Fix the water tank and avoid the damage appearance of the water tank
0184280000502P	Fixing strap	1	Fix the water tank to the wall

Notes

(a) Distance between indoor unit and water tank should not exceed 5m levelly and 3m vertically. If higher, please contact with us. Water tank on lower and main unit on higher side is recommended.

(b) Prepare the materials according to the above joints dimension. If cut-off valve is installed outside the room, PPR pipe is recommended to avoid freeze damage.

(c) Waterway pipelines can't be installed until water heater unit is fixed. Do not let dust and other sundries enter into pipeline system during installation of connection pipes.

(d) After connection of all waterway pipelines, perform leakage test firstly. After that, perform heat preservation of waterway system; meanwhile, pay more attention to valves and pipe joints. Ensure enough thickness of insulated cotton. If necessary, install heating device for pipeline to prevent the pipeline from freezing.

(e) Hot water supplied from insulated water tank depends on pressure of water tap, so there must be supply of tap water.

(f) During using, the cut-off valve of cooling water inlet of water tank should be kept normally on.

18.4 Electric wiring work

18.4.1 Wiring principle

General principles

(1) Wires, equipment and connectors supplied for use on the site must be in compliance with provisions of regulations and engineering requirements.

(2) Only electricians holding qualification are allowed to perform wire connection on the site.

(3) Before connection work is started, the power supply must be shut off.

(4) Installer shall be responsible for any damage due to incorrect connection of the external circuit.

(5) Only copper wires are allowed to be used.

(6) Connection of power cable to the electric cabinet of the unit

(7) Power cables should be laid out through cabling trough, conduit tube or cable channel.

(8) Power cables to be connected into the electric cabinet must be protected with rubber or plastic to prevent scratch by edge of metal plate.

(9) Power cables close to the electric cabinet of the unit must be fixed reliably to make the power terminal in the cabinet free from an external force.

(10) Power cable must be grounded reliably.

18.4.2 Specification of power supply wire and leakage switch

Power cable specifications and Leakage switch types in the following list are recommended.

Model	Power Supply	Leakage Switch	Minimum Sectional Area of Earth Wire	Minimum Sectional Area of Power Supply Wire
	V,Ph,Hz	(A)	(mm^2)	(mm^2)
CH-HP8.0SIRM3(O)	400V 3N~,50Hz	16	2.5	2.5
CH-HP10SIRM3(O)		16	2.5	2.5
CH-HP8.0SIRM3(I)		20	4.0	4.0
CH-HP10SIRM3(I)		20	4.0	4.0
CH-HP12SIRM3(O)		16	2.5	2.5
CH-HP14SIRM3(O)		16	2.5	2.5
CH-HP16SIRM3(O)		16	2.5	2.5
CH-HP12SIRM3(I)		20	4.0	4.0
CH-HP14SIRM3(I)		20	4.0	4.0
CH-HP16SIRM3(I)		20	4.0	4.0
CH-HP12SIRK3(O)	230VAC,1Ph,50Hz	32	6.0	6.0
CH-HP14SIRK3(O)		40	6.0	6.0
CH-HP16SIRK3(O)		40	6.0	6.0
CH-HP12SIRK3(I)		40	6.0	6.0
CH-HP14SIRK3(I)		40	6.0	6.0
CH-HP16SIRK3(I)		40	6.0	6.0

Notes

(a) Leakage Switch is necessary for additional installation. If circuit breakers with leakage protection are in use, action response time must be less than 0.1 second, leakage circuit must be 30mA.

(b) The above selected power cable diameters are determined based on assumption of distance from the distribution cabinet to the unit less than 75m. If cables are laid out in a distance of 75m to 150m, diameter of power cable must be increased to a further grade.

(c) The power supply must be of rated voltage of the unit and special electrical line for air-conditioning.

(d) All electrical installation shall be carried out by professional technicians in accordance with the local laws and regulations.

(e) Ensure safe grounding and the grounding wire shall be connected with the special grounding equipment of the building and must be installed by professional technicians.

(f) The specifications of the breaker and power cable listed in the table above are determined based on the maximum power (maximum amps) of the unit.

(g) The specifications of the power cable listed in the table above are applied to the conduit-guarded multi-wire copper cable (like, YJV XLPE insulated power cable) used at 40℃ and resistible to 90℃ (see IEC 60364-5-52). If the working condition changes, they should be modified according to the related national standard.

(h) The specifications of the breaker listed in the table above are applied to the breaker with the working temperature at 40℃. If the working condition changes, they should be modified according to the related national standard.

(i) A circuit breaker must be added to the fixed line. The circuit breaker is all-pole disconnected and the breaking distance of the contact is at least 3mm.

19. Wring Diagram

19.1 Control board

(1) CH-HP8.0SIRM3, CH-HP10SIRM3, CH-HP12SIRM3, CH-HP14SIRM3, CH-HP16SIRM3, CH-HP12SIRK3, CH-HP14SIRK3, CH-HP16SIRK3

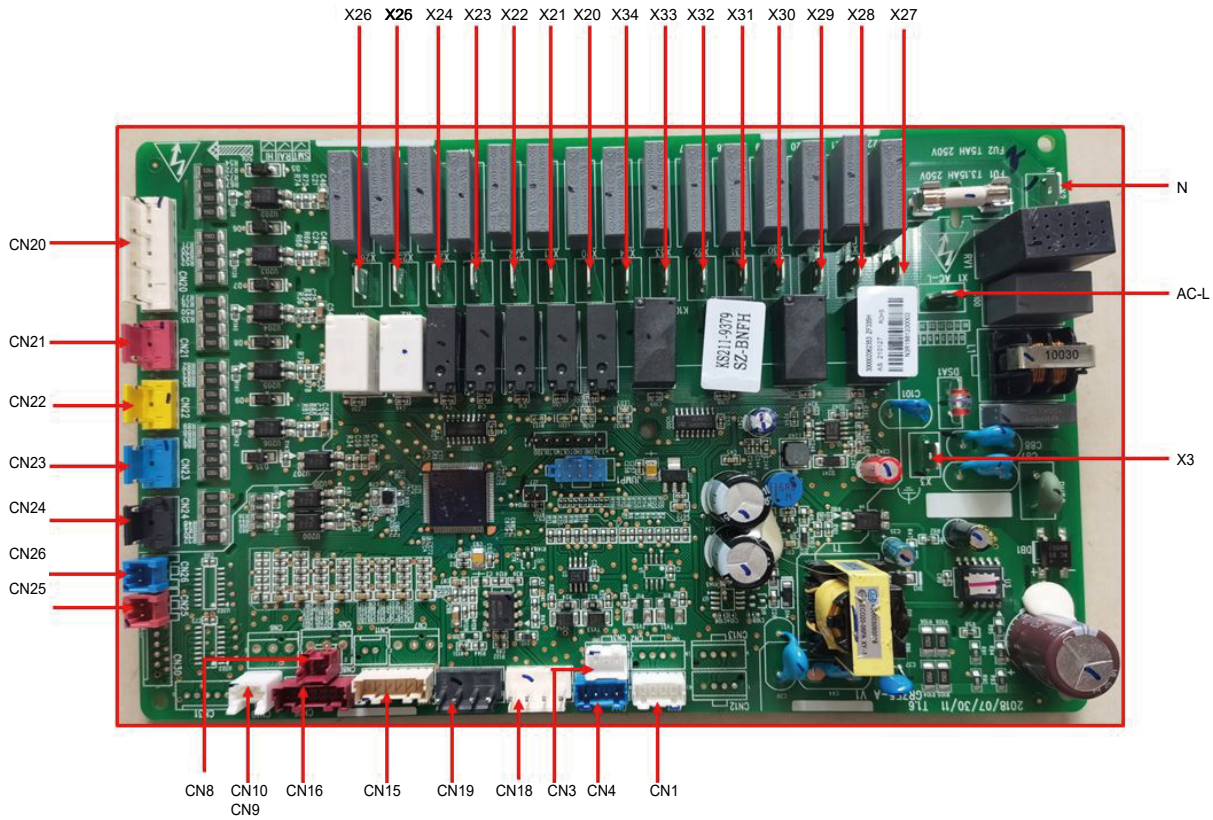

Silk Screen	Introduction
AC-L	Live wire of power supply
N	Neutral wire of power supply
X3	To the ground
X20	E-heater of water tank
X21	E-heater 1
X22	E-heater 2
X23	Other thermal by 220VAC
X24	Reserved
X25	Reserved
X26	Reserved
X27	2-way valve 1 is normally open
X28	2-way valve 1 is normally closed
X29	Reserved
X30	Reserved
X31	Reserved
X32	Reserved
X33	Reserved
X34	3-way valve signal
CN30	Build-in water pump signal(PWM)

Silk Screen	Introduction
CN31	Back-up water pump signal(PWM)-field supply
CN18	20K temperature sensor (inlet water)
CN19	20K temperature sensor (outlet water)
CN15	20K temperature sensor (refrigerant liquid line)
CN15	20K temperature sensor (outlet water)
CN15	20K temperature sensor (refrigerant liquid line)
CN16	20K temperature sensor (refrigerant vapor line)
CN16	10K temperature sensor (leaving water for the optional electric heater)
CN16	Rreserved
CN8	Water tank temperature sensor
CN9	Remote room temperature sensor
CN7	Rreserved
CN6	Rreserved
CN5	Rreserved
CN20	Thermostat
CN21	Detection to welding protection for the optional electric heater 1
CN22	Detection to welding protection for the optional electric heater 2
CN23	Detection to welding protection for the water tank electric heater
CN24	Gate-control detection
CN25	Flow switch
CN26	Reserved
CN3	Communication with outdoor unit
CN4	Communication with control panel

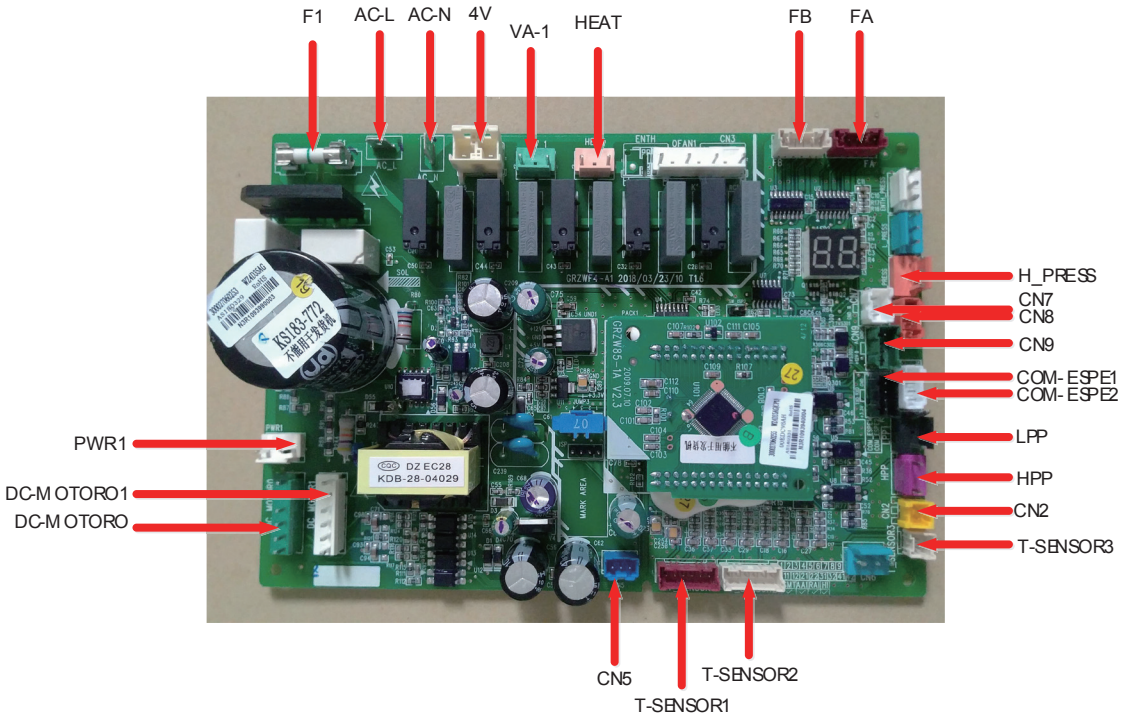

Silk Screen	Introduction
AC-L	Live wire of power supply
N	Neutral wire of power supply
PWR1	Reserved

Silk Screen	Introduction
F1	Fuse
4V	4-way valve
VA-1	E-heater of chassis
HEAT	E-heater of cranke
DC-MOTORO	Reserved
DC-MOTORO1	Fan motor
FA	EXV 1
FB	EXV 2
T_SENSOR2	1,2: environment; 3,4:discharge; 5,6: suction
T_SENSOR1	1,2: economizer inlet; 3,4: economizer outlet; 5,6:defrost
H_PRESS	High pressure sensor
HPP	High pressure switch
LPP	Low pressure switch for heating
CN2	Low pressure switch for cooling
CN7	Communication to Indoor unit
CN8	Reserved
CN9	Reserved
COM_ESPE1	Reserved
COM_ESPE2	Communication to driver board
CN5	Reserved

(2) CH-HP8.0SIRM3, CH-HP10SIRM3

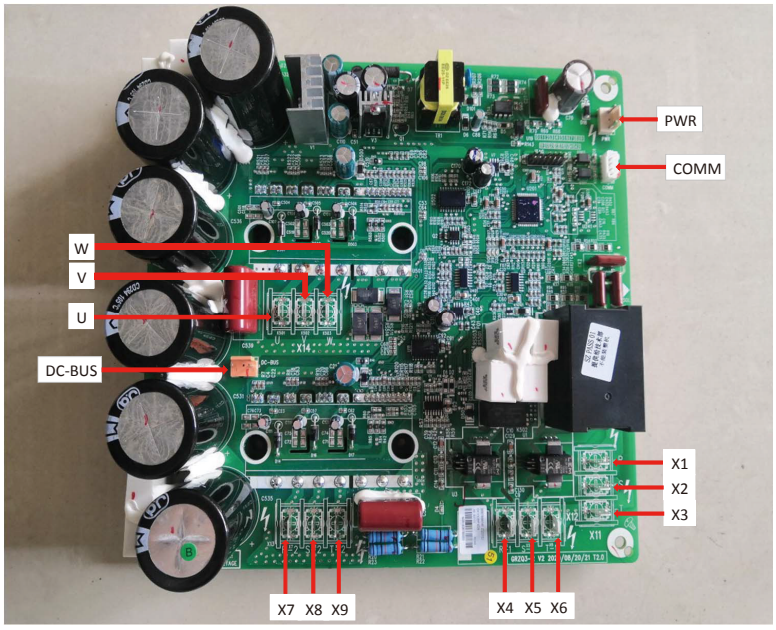

X1/ X2/X3	Three-phase power input
X4/ X5/X6	To one end of the reactor (input)
X7/ X8/X9	To the other end of the reactor (output)
U/V/W	Connection terminal of the compressor

PWR	Input port of the switching power
COMM	UART communication interface
DC-BUS	Discharge terminals

(3) CH-HP12SIRK3, CH-HP14SIRK3, CH-HP16SIRK3

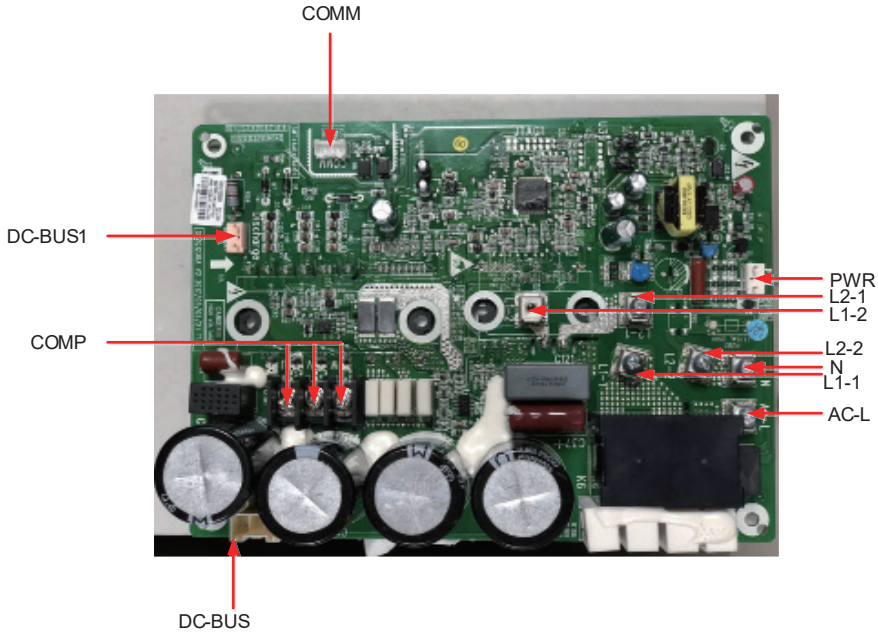

NO	Silk Screen	Introduction
1	AC-L	L-OUT Live line input of the filter board
2	N	N-OUT Neutral line input of the filter board
3	L1-1	To PFC inductor brown line
4	L1-2	To PFC inductor white line
5	L2-1	To PFC inductor yellow line
6	L2-2	To PFC inductor blue line
7	COMP	Wiring board (3-pin)(DT-66BO1W-03)(variable-frequency)
8	COMM	Communication interface[1-3.3V,2-TX,3-RX,4-GND]
9	DC-BUS	DC-BUS Pin for electric discharge of the high-voltage bar during test
10	PWR	Power input of the drive board [1-GND,2-18V,3-15V]
11	DC-BUS1	Pin for electric discharge of the high-voltage bar during test

(4) CH-HP12SIRM3, CH-HP14SIRM3, CH-HP16SIRM3

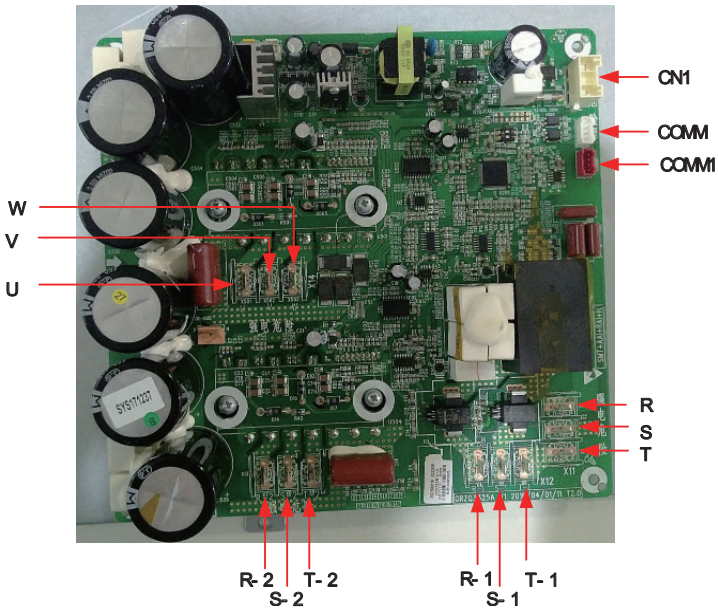

Silk Screen	Specification
W	Connector to the compressor phase-W
U	Connector to the compressor phase-U
V	Connector to the compressor phase-V
R-2	Connector to reactor (input)
S-2	
T-2	
R-1	Connector to reactor (input)
S-1	
T-1	
R	Connector to filter L1-F
S	Connector to filter L2-F
T	Connector to filter L3-F
COMM1	Reserved
COMM	Communication
CN1	Switch power input

19.2 Electric wiring

19.2.1 Wiring principle

Refer to Section 18.4.

19.2.2 Electric wiring design

The wiring diagram stuck to the unit always prevails.

(1) Wiring diagram: indoor unit

- CH-HP8.0SIRM3(I), CH-HP10SIRM3(I), CH-HP12SIRM3(I), CH-HP14SIRM3(I), CH-HP16SIRM3(I)

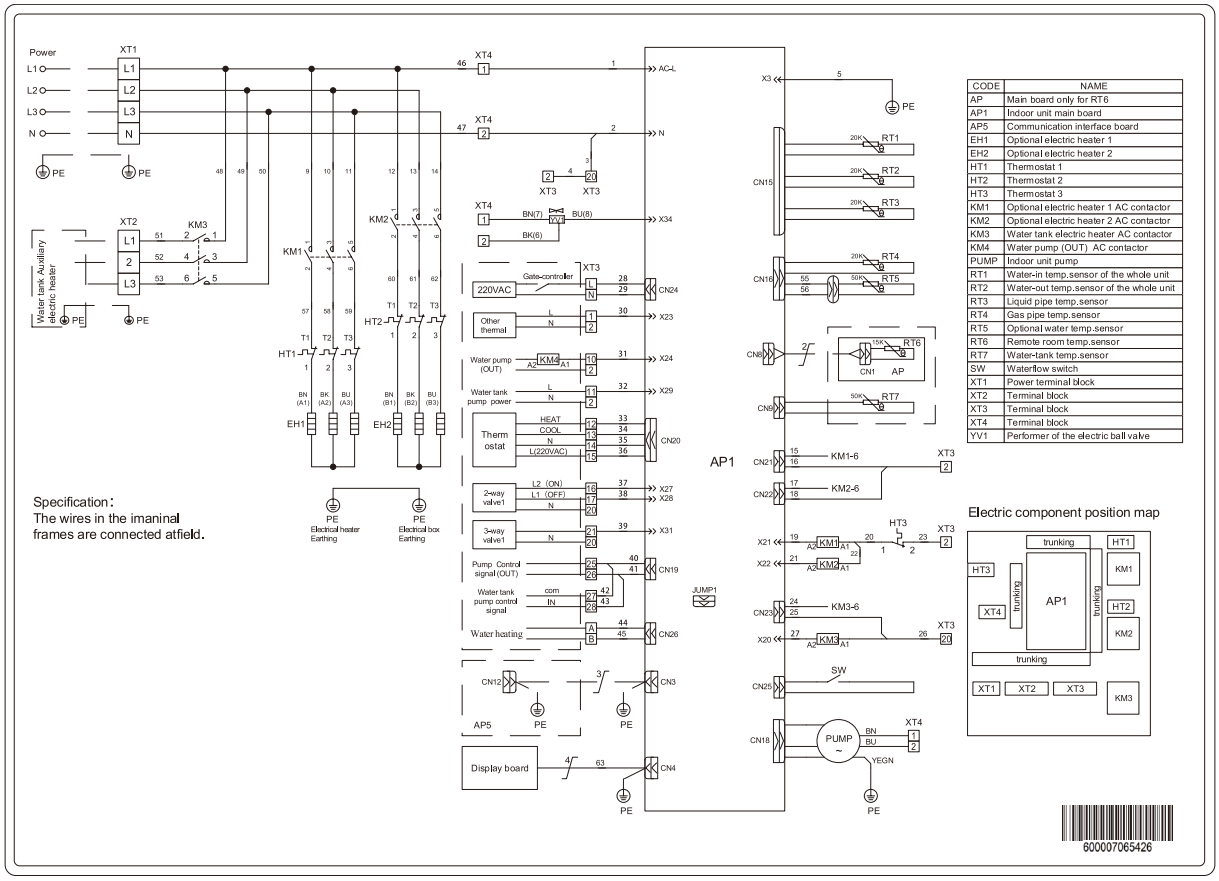

CODE	NAME
AP	Main board only for RT6
AP1	Indoor unit main board
AP5	Communication interface board
EH1	Optional electric heater 1
EH2	Optional electric heater 2
HT1	Thermostat 1
HT2	Thermostat 2
HT3	Thermostat 3
KM1	Optional electric heater 1 AC contactor
KM2	Optional electric heater 2 AC contactor
KM3	Water tank electric heater AC contactor
KM4	Water pump (OUT) AC contactor
PUMP	Indoor unit pump
RT1	Water-in temp.sensor of the whole unit
RT2	Water-out temp.sensor of the whole unit
RT3	Liquid pipe temp.sensor
RT4	Gas pipe temp.sensor
RT5	Optional water temp.sensor
RT6	Remote room temp.sensor
RT7	Water-tank temp.sensor
SW	Waterflow switch
XT1	Power terminal block
XT2	Terminal block
XT3	Terminal block
XT4	Terminal block
YV1	Performer of the electric ball valve

- CH-HP12SIRK3(I) , CH-HP14SIRK3(I), CH-HP16SIRK3(I)

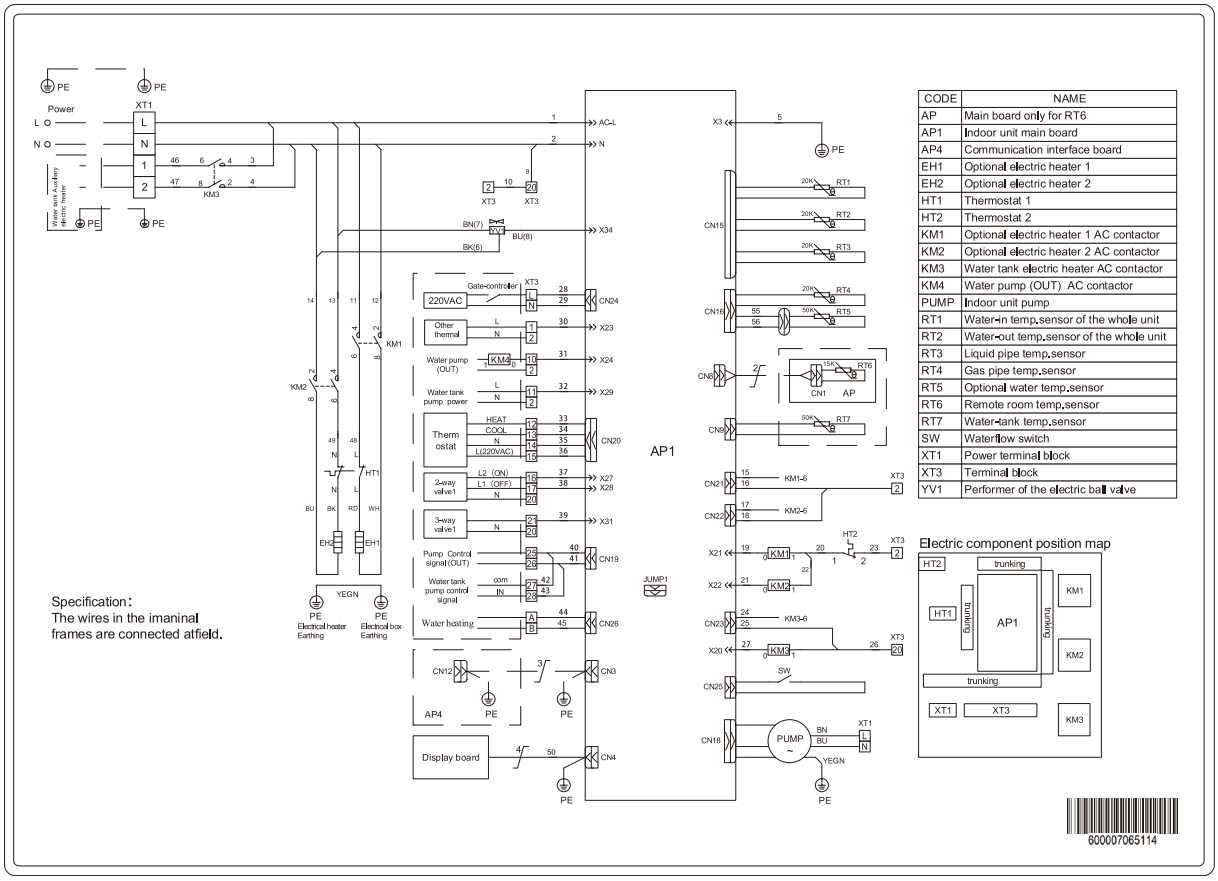

CODE	NAME
AP	Main board only for RT6
AP1	Indoor unit main board
AP4	Communication interface board
EH1	Optional electric heater 1
EH2	Optional electric heater 2
HT1	Thermostat 1
HT2	Thermostat 2
KM1	Optional electric heater 1 AC contactor
KM2	Optional electric heater 2 AC contactor
KM3	Water tank electric heater AC contactor
KM4	Water pump (OUT) AC contactor
PUMP	Indoor unit pump
RT1	Water-in temp.sensor of the whole unit
RT2	Water-out temp.sensor of the whole unit
RT3	Liquid pipe temp.sensor
RT4	Gas pipe temp.sensor
RT5	Optional water temp.sensor
RT6	Remote room temp.sensor
RT7	Water-tank temp.sensor
SW	Waterflow switch
XT1	Power terminal block
XT3	Terminal block
YV1	Performer of the electric ball valve

Specification:
The wires in the imaninal frames are connected atfield.

600007065114

(2) Wiring diagram: outdoor unit

- CH-HP8.0SIRM3(O), CH-HP10SIRM3(O),

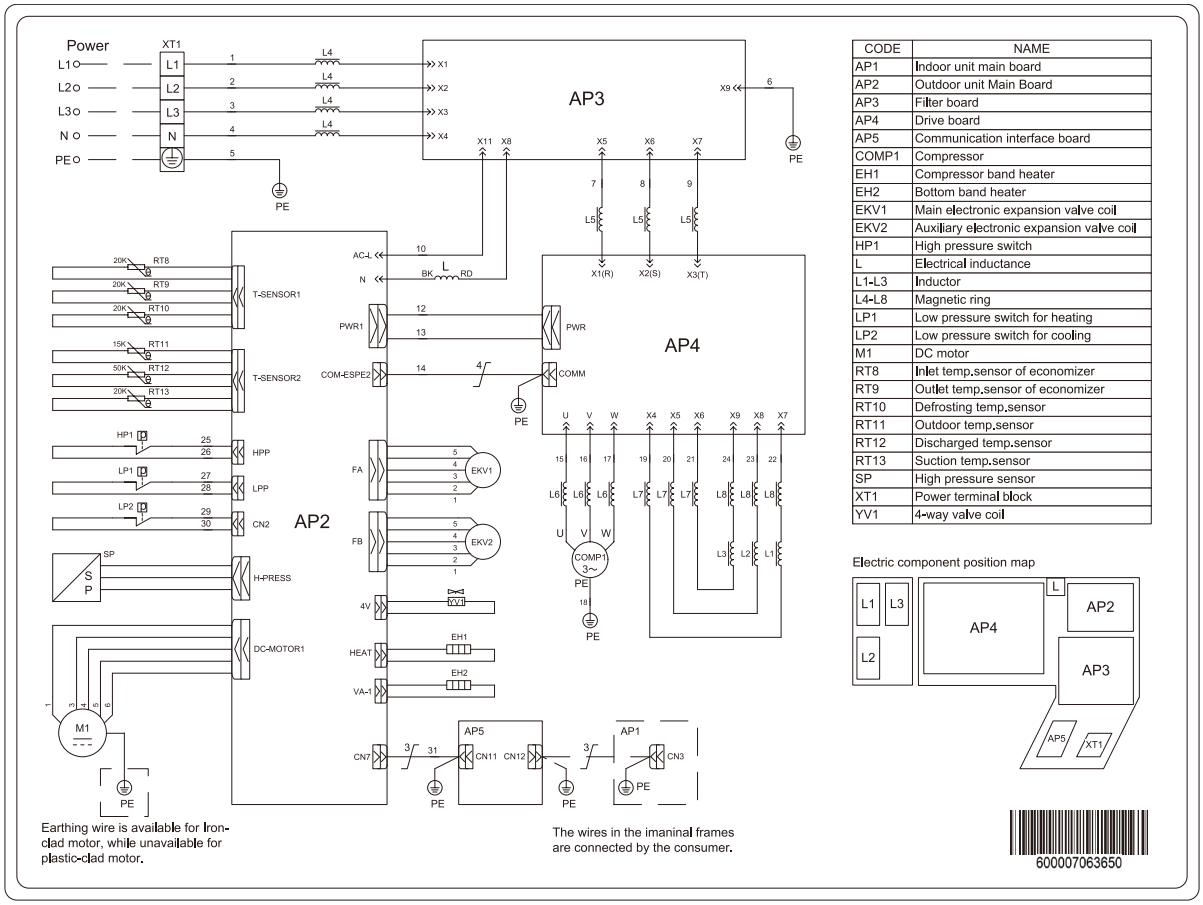

CODE	NAME
AP1	Indoor unit main board
AP2	Outdoor unit Main Board
AP3	Filter board
AP4	Drive board
AP5	Communication interface board
COMP1	Compressor
EH1	Compressor band heater
EH2	Bottom band heater
EKV1	Main electronic expansion valve coil
EKV2	Auxiliary electronic expansion valve coil
HP1	High pressure switch
L	Electrical inductance
L1-L3	Inductor
L4-L8	Magnetic ring
LP1	Low pressure switch for heating
LP2	Low pressure switch for cooling
M1	DC motor
RT8	Inlet temp.sensor of economizer
RT9	Outlet temp.sensor of economizer
RT10	Defrosting temp.sensor
RT11	Outdoor temp.sensor
RT12	Discharged temp.sensor
RT13	Suction temp.sensor
SP	High pressure sensor
XT1	Power terminal block
YV1	4-way valve coil

- CH-HP12SIRM3(O) , CH-HP14SIRM3(O), CH-HP16SIRM3(O)

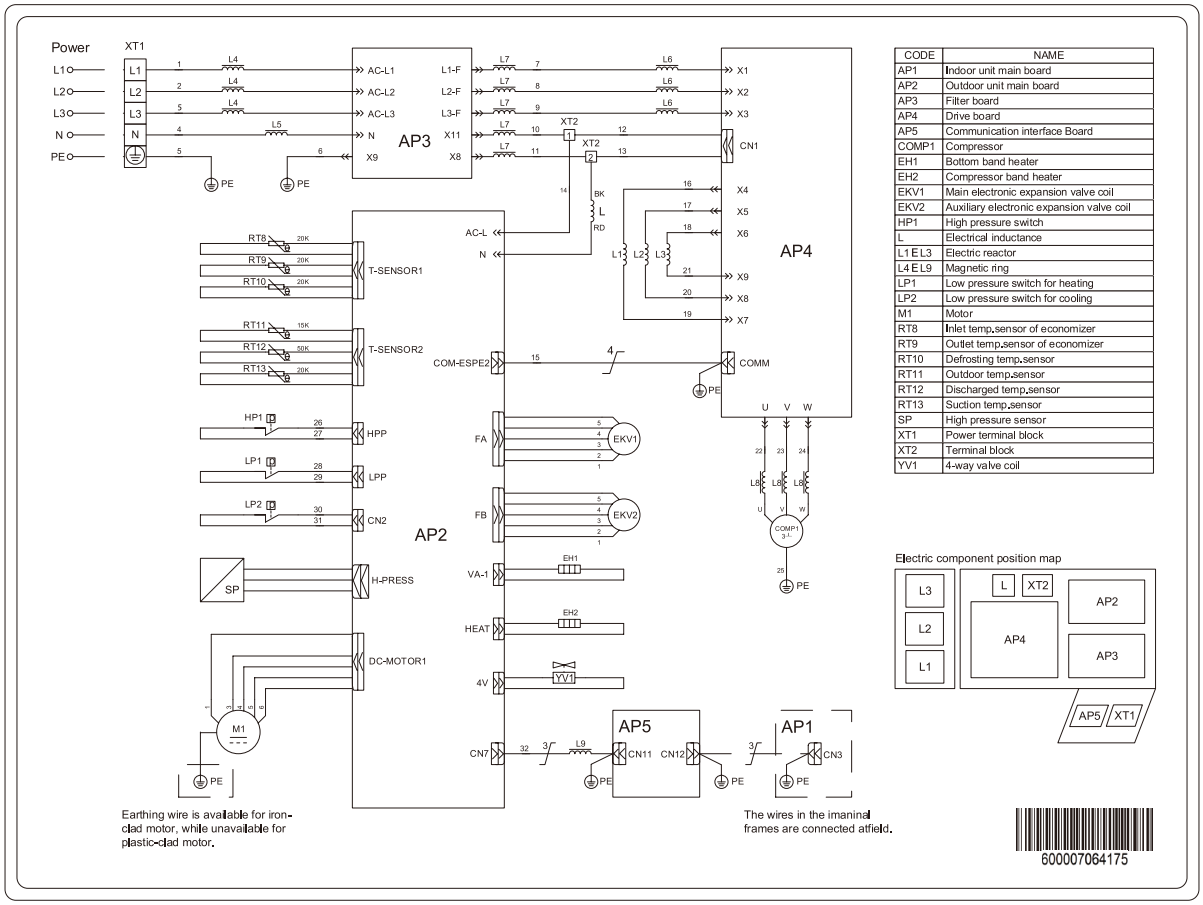

CODE	NAME
AP1	Indoor unit main board
AP2	Outdoor unit main board
AP3	Filter board
AP4	Drive board
AP5	Communication interface Board
COMP1	Compressor
EH1	Bottom band heater
EH2	Compressor band heater
EKV1	Main electronic expansion valve coil
EKV2	Auxiliary electronic expansion valve coil
HP1	High pressure switch
L	Electrical inductance
L1 E L3	Electric reactor
L4 E L9	Magnetic ring
LP1	Low pressure switch for heating
LP2	Low pressure switch for cooling
M1	Motor
RT8	Inlet temp.sensor of economizer
RT9	Outlet temp.sensor of economizer
RT10	Defrosting temp.sensor
RT11	Outdoor temp.sensor
RT12	Discharged temp.sensor
RT13	Suction temp.sensor
SP	High pressure sensor
XT1	Power terminal block
XT2	Terminal block
YV1	4-way valve coil

- CH-HP12SIRK3(O) , CH-HP14SIRK3(O), CH-HP16SIRK3(O)

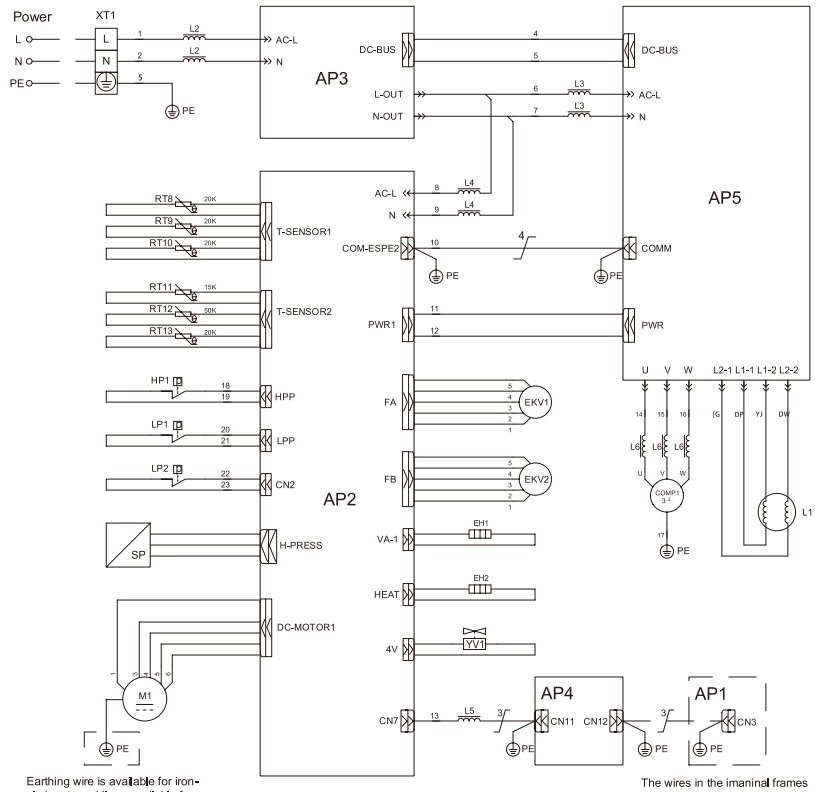

CODE	NAME
AP1	Indoor unit main board
AP2	Outdoor unit main board
AP3	Filter board
AP4	Communication interface Board
AP5	Drive board
COMP1	Compressor
EH1	Bottom band heater
EH2	Compressor band heater
EKV1	Main electronic expansion valve coil
EKV2	Auxiliary electronic expansion valve coil
HP1	High pressure switch
L1	PFC electrical inductance
L2~L6	Magnetic ring
LP1	Low pressure switch for heating
LP2	Low pressure switch for cooling
M1	Motor
RT8	Inlet temp.sensor of economizer
RT9	Outlet temp.sensor of economizer
RT10	Defrosting temp.sensor
RT11	Outdoor temp.sensor
RT12	Discharged temp.sensor
RT13	Suction temp.sensor
SP	High pressure sensor
XT1	Power terminal block
YV1	4-way valve coil

Electric component position map

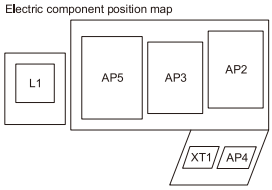

600007064177

(3) Water tank

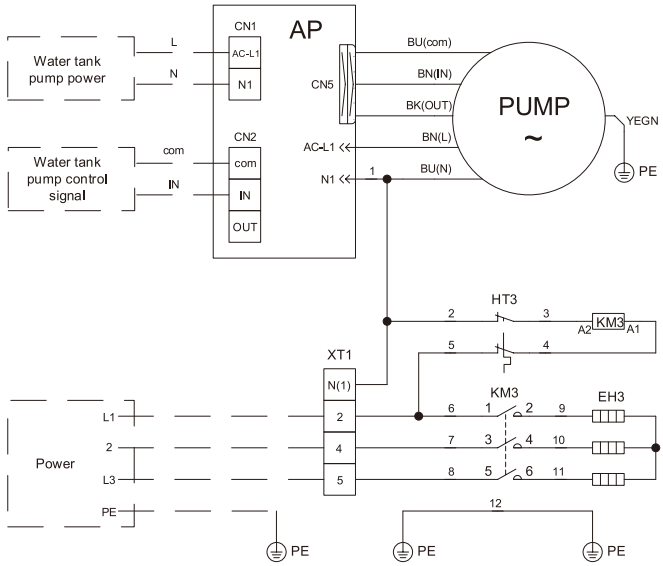

CODE	NAME
EH3	Water tank electric heater
HT3	Thermostat
KM3	Water tank electric heater AC contactor
PUMP	Indoor unit pump
XT1	Terminal block

Specification:
1.The wires in the imaninal frames are connected atfield.
2.The PUMP connect to the terminal block stuck to the indoor unit wiring diagram always prevails.

19.2.3 Terminal board

(1) CH-HP8.0SIRM3(I), CH-HP10SIRM3(I), CH-HP12SIRM3(I) , CH-HP14SIRM3(I), CH-HP16SIRM3(I)

Terminal board XT3

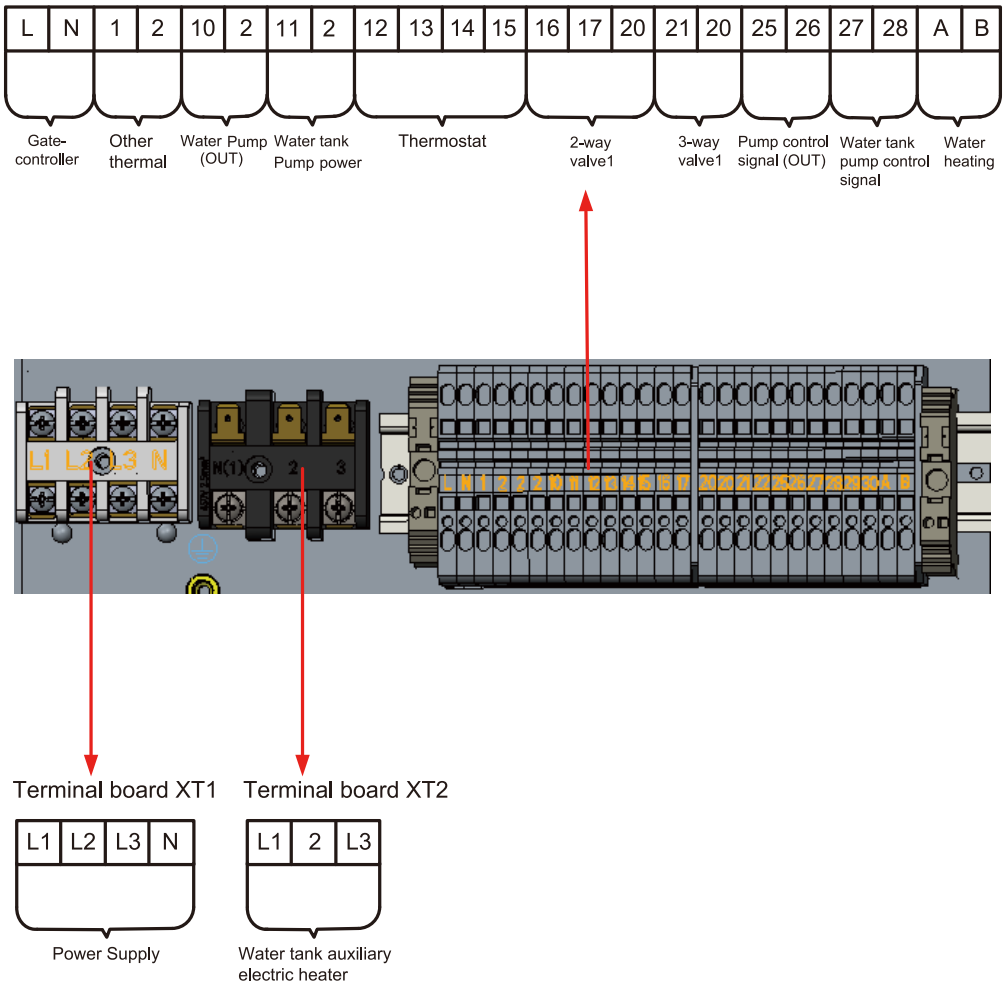

(2) CH-HP12SIRK3(I) , CH-HP14SIRK3(I), CH-HP16SIRK3(I)

Terminal board XT3

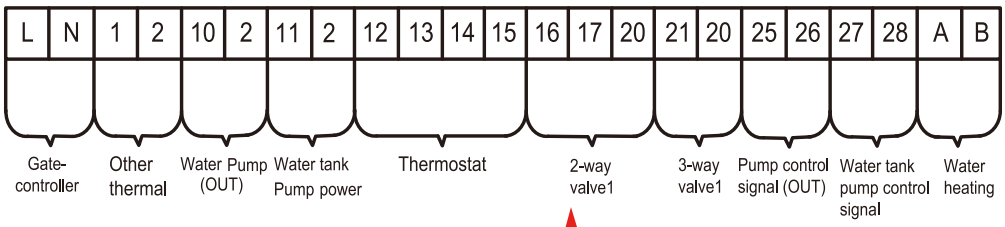

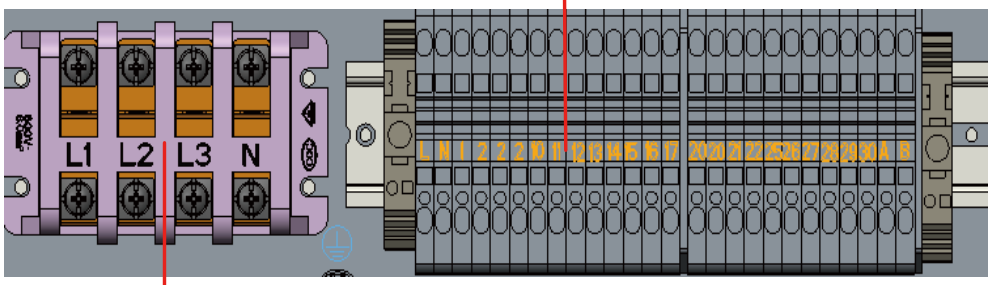

Terminal board XT1

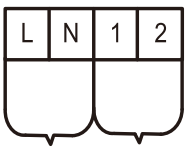

20. Commissioning

20.1 Check before startup

For safety of users and unit, the unit must be started up for check before debugging. The procedures are as below:

The following items shall be performed by qualified repair persons.		
Confirm together with the sales engineer, dealer, installing contractor and customers for the following items finished or to be finished.		
No.	**Confirmation of Installation**	√
1	If the contents of Application for Installation of this Unit by Installer are real. If not, commissioning will be refused.	□
2	Is there written notice in which items are shown in respect of unqualified installation?	□
3	Are Application for Installation and Debugging list filed together?	□
No.	Pre-check	√
1	Is appearance of the unit and internal pipeline system ok during conveying, carrying or installation?	□
2	Check the accessories attached with the unit for quantity, package and so on.	□
3	Make sure there is drawings in terms of electricity, control, design of pipeline and so on.	□
4	Check if installation of the unit is stable enough and there is enough space for operation and repair.	□
5	Completely test refrigerant pressure of each unit and perform leakage detection of the unit.	□
6	Is the water tank installed stably and are supports secure when the water tank is full?	□
7	Are heat insulating measures for the water tank, outlet/inlet pipes and water replenishing pipe proper?	□
8	Are the nilometer of water tank, water temperature indicator, controller, manometer, pressure relief valve and automatic discharge valve etc. installed and operated properly?	□
9	Does power supply accord with the nameplate? Do power cords conform to applicable requirements?	□
10	Is power supply and control wiring connected properly according to wiring diagram? Is earthing safe? Is each terminal stable?	□
11	Are connection pipe, water pump, manometer, thermometer, valve etc. are installed properly?	□
12	Is each valve in the system open or closed according to requirements?	□
13	Confirm that the customers and inspection personnel of Part A are at site.	□
14	Is Installation Check-up Table completed and signed by the installation contractor?	□
Attention: If there is any item marked with ×, please notify the contractor. Items listed above are just for reference.		

Confirmed Items after pre-checking	**General Evaluation: Commissioning □ Service□**	
	Judge the following items (if no item has been pointed out, qualification will be regarded.)	
	a: Power supply and electric control system	b: Loading calculation
	c: Heating problems of Unit	d: Noise problem
	e: Pipeline problem	f: Others
	Normal commissioning work can't be performed unless all installation items are qualified. If there is any problem, it must be solved firstly. The installer will be responsible for all costs for delay of debugging and re-debugging incurred by any problem which is not solved immediately.	
	Submit schedule of amending reports to installer.	
	Is the written service report which should be signed after communication provided to installer?	
	Yes ( ) No ( )	

20.2 Test run

Test run is testing whether the unit can run normally via preoperation. If the unit cannot run normally, find and solve problems until the test run is satisfactory. All inspections must meet the requirements before performing the test run. Test run should follow the content and steps of the table below:

The following procedure should be executed by experience and qualified maintenance men.	
No.	**Start up the pretest procedure**
Notice: before test, ensure that all power must be cut off, including the far- end power switch, otherwise, it may cause casualty.	
1	Ensure that the compressor of the unit is preheated for 8h.
⚠Caution: heat the lubricating oil at least 8h in advance to prevent refrigerant from mixing with the lubricating oil, which may cause damage to the compressor when starting up the unit.	
2	Check whether the phase sequence of the main power supply is correct. If not, correct the phase sequence firstly.
⚠Recheck the phase sequence before start-up to avoid reverse rotation of the compressor which may damage the unit.	
3	Apply the universal electric meter to measure the insulation resistance between each outdoor phase and earth as well as between phases.
⚠Caution: defective earthing may cause electric shock.	
No.	**Ready to start**
1	Cut off all temporary power supply, resume all the insurance and check the electricity for the last time.
	Check the power supply and voltage of the control circuit; _____V must be ±10% within the range of rated operating power.
No.	**Start up the unit**
1	Check all the conditions needed to start up the unit: operation mode, required load etc.
2	Start up the unit, and observe the operation of compressor, electric expanding valve, fan motor and water pump etc.
	Note: the unit will be damaged under abnormal running state. Do not operate the unit in states of high pressure and high current.
Others:	
Items for acceptance after commissioning	Estimation or suggestion on the general running situation: good, modify
	Identify the potential problem (nothing means the installation and commissioning are in accordance with the requirements.)
	a. problem of power supply and electric control system: b. problem of load calculation:
	c. outdoor refrigerant system: d. noise problem:
	e. problem of indoor and piping system: h. other problems:
	During operation, it is needed to charge for the maintenance due to non-quality problems such as incorrect installation and maintenance.
	Acceptance
	Is the user trained as required? Please sign. Yes( ) No( )

21. Daily Operation and Maintenance

In order to avoid damage of the unit, all protecting devices in the unit had been set before delivery, so please do not adjust or remove them.

For the first startup of the unit or next startup of unit after long-period stop (above 1 day) by cutting off the power, please electrify the unit in advance to preheat the unit for more than 8 hours.

Never put sundries on the unit and accessories. Keep dry, clean and ventilated around the unit.

Remove the dust accumulated on the condenser fin timely to ensure performance of the unit and to avoid stop of the unit for protection.

In order to avoid protection or damage of the unit caused by blockage of the water system, clean the filter in water system periodically and frequently check water replenishing device.

In order to ensure anti-freezing protection, never cut off the power if ambient temperature is below zero in winter.

In order to avoid frost crack of the unit, water in the unit and pipeline system not used for a long period should be drained. In addition, open the end cap of the water tank for drainage.

When the water tank has been installed but the water tank is set to “Without”, functions relative with the water tank will not work and the displayed water tank temperature will always be “-30”. In this case, the water tank would suffer frostbite and even other severe influences under low temperature. Therefore, once the water tank has been installed, the water tank must be set to ‘’With”, otherwise C&H will not be responsible for this abnormal operation.

Never frequently make the unit on/off and close the manual valve of the water system during operation of the unit by users.

Ensure frequent check to the working condition of each part to see if there is oil stain at pipeline joint and charge valve to avoid leakage of refrigerant.

If malfunction of the unit is out of control of users, please timely contact with authorized service center.

Notes

(a) The water pressure gage is installed in the returning water line in the unit. Please adjust the hydraulics system pressure according to next item:

- If the pressure is less than 0.5 bar, please recharge the water immediately;
- When recharging, the hydraulics system pressure should be not more than 2.5 Bar.

Malfunctions	Reasons	Troubleshooting
	Power supply has problem. Connection wire is loose. Malfunction of mainboard. Malfunction of compressor.	Phase sequence is reverse. Check out and re-fix. Find out the reasons and repair. Replace compressor.
Heavy noise of fan	Fixing bolt of fan is loose. Fan blade touches shell or grill. Operation of fan is unreliable.	Re-fix fixing bolt of fan. Find out the reasons and adjust. Replace fan.
Heavy noise of compressor	Liquid slugging happens when liquid refrigerant enters into compressor. Internal parts in compressor are broken.	Check if expansion valve is failure and temp. sensor is loose. If that, repair it. Replace compressor.
Water pump does not run or runs abnormally	Malfunction of power supply or terminal. Malfunction of relay. There is air in water pipe.	Find out the reasons and repair. Replace relay. Evacuate.
Compressor starts or stops frequently	Poor or excess refrigerant. Poor circulation of water system. Low load.	Discharge or add part of refrigerant. Water system is blocked or there is air in it. Check water pump, valve and pipeline. Clean water filter or evacuate. Adjust the load or add accumulating devices.
The unit does not heat although compressor is running	Leakage of refrigerant. Malfunction of compressor.	Repair by leakage detection and add refrigerant. Replace compressor.

Malfunctions	Reasons	Troubleshooting
Poor efficiency of hot water heating	Poor heat insulation of water system. Poor heat exchange of evaporator. Poor refrigerant of unit. Blockage of heat exchanger at water side.	Enhance heat insulation efficiency of the system. Check if air in or out of unit is normal and clean evaporator of the unit. Check if refrigerant of unit leaks. Clean or replace heat exchanger.

21.1 Recovery

When removing refrigerant from a system, either for servicing or decommissioning, it is recommended good practice that all refrigerants are removed safely.

When transferring refrigerant into cylinders, ensure that only appropriate refrigerant recovery cylinders are employed. Ensure that the correct number of cylinders for holding the total system charge are available. All cylinders to be used are designated for the recovered refrigerant and labelled for that refrigerant (i.e. special cylinders for the recovery of refrigerant). Cylinders shall be complete with pressure relief valve and associated shut-off valves in good working order. Empty recovery cylinders are evacuated and, if possible, cooled before recovery occurs.

The recovery equipment shall be in good working order with a set of instructions concerning the equipment that is at hand and shall be suitable for the recovery of flammable refrigerants.

In addition, a set of calibrated weighing scales shall be available and in good working order.

Hoses shall be complete with leak-free disconnect couplings and in good condition. Before using the recovery machine, check that it is in satisfactory working order, has been properly maintained and that any associated electrical components are sealed to prevent ignition in the event of a refrigerant release. Consult manufacturer if in doubt.

The recovered refrigerant shall be returned to the refrigerant supplier in the correct recovery cylinder, and the relevant Waste Transfer Note arranged. Do not mix refrigerants in recovery units and especially not in cylinders.

If compressors or compressor oils are to be removed, ensure that they have been evacuated to an acceptable level to make certain that flammable refrigerant does not remain within the lubricant. The evacuation process shall be carried out prior to returning the compressor to the suppliers. Only electric heating to the compressor body shall be employed to accelerate this process. When oil is drained from a system, it shall be carried out safely.

21.2 Decommissioning

Before carrying out this procedure, it is essential that the technician is completely familiar with the equipment and all its detail. It is recommended good practice that all refrigerants are recovered safely. Prior to the task being carried out, an oil and refrigerant sample shall be taken in case analysis is required prior to re-use of reclaimed refrigerant. It is essential that electrical power is available before the task is commenced.

a) Become familiar with the equipment and its operation.

b) Isolate system electrically.

c) Before attempting the procedure ensure that: mechanical handling equipment is available, if required, for handling refrigerant cylinders; all personal protective equipment is available and being used correctly; the recovery process is supervised at all times by a competent person; recovery equipment and cylinders conform to the appropriate standards.

d) Pump down refrigerant system, if possible.

e) If a vacuum is not possible, make a manifold so that refrigerant can be removed from various parts of the system.

f) Make sure that cylinder is situated on the scales before recovery takes place.

g) Start the recovery machine and operate in accordance with manufacturer's instructions.

h) Do not overfill cylinders. (No more than 80 % volume liquid charge).

i) Do not exceed the maximum working pressure of the cylinder, even temporarily.

j) When the cylinders have been filled correctly and the process completed, make sure that the cylinders and the equipment are removed from site promptly and all isolation valves on the equipment are closed off.

k) Recovered refrigerant shall not be charged into another refrigeration system unless it has been cleaned and checked.

21.3 Safety consideration

Checking for presence of refrigerant

The area shall be checked with an appropriate refrigerant detector prior to and during work, to ensure the technician is aware of potentially toxic or flammable atmospheres. Ensure that the leak detection equipment being used is suitable for use with all applicable refrigerants, i.e. non-sparking, adequately sealed or intrinsically safe.

Presence of fire extinguisher

If any hot work is to be conducted on the refrigeration equipment or any associated parts, appropriate fire extinguishing equipment shall be available to hand. Have a dry powder or CO2 fire extinguisher adjacent to the charging area.

Ventilated area

Ensure that the area is in the open or that it is adequately ventilated before breaking into the system or conducting any hot work. A degree of ventilation shall continue during the period that the work is carried out. The ventilation should safely disperse any released refrigerant and preferably expel it externally into the atmosphere.

Checks to the refrigeration equipment

Where electrical components are being changed, they shall be fit for the purpose and to the correct specification. At all times the manufacturer s maintenance and service guidelines shall be followed. If in doubt, consult the manufacturer s technical department for assistance.

Checks to electrical devices

That capacitors are discharged: this shall be done in a safe manner to avoid possibility of sparking; that no live electrical components and wiring are exposed while charging, recovering or purging the system

Repairs to sealed components

During repairs to sealed components, all electrical supplies shall be disconnected from the equipment being worked upon prior to any removal of sealed covers, etc. If it is absolutely necessary to have an electrical supply to equipment during servicing, then a permanently operating form of leak detection shall be located at the most critical point to warn of a potentially hazardous situation. Replacement parts shall be in accordance with the manufacturer s specifications.

Repair to intrinsically safe components

Do not apply any permanent inductive or capacitance loads to the circuit without ensuring that this will not exceed the permissible voltage and current permitted for the equipment in use. Replace components only with parts specified by the manufacturer. Other parts may result in the ignition of refrigerant in the atmosphere from a leak.

Cabling

Check that cabling will not be subject to wear, corrosion, excessive pressure, vibration, sharp edges or any other adverse environmental effects. The check shall also take into account the effects of aging or continual vibration from sources such as compressors or fans.

Detection of flammable refrigerants

Under no circumstances shall potential sources of ignition be used in the searching for or detection of refrigerant leaks. A halide torch (or any other detector using a naked flame) shall not be used.

Leak detection methods

Leak detection fluids are suitable for use with most refrigerants but the use of detergents containing chlorine shall be avoided as the chlorine may react with the refrigerant and corrode the copper pipe-work.

Pressure relief of the water tank

The water may drip from the discharge pipe of the pressure-relief device and that this pipe must be left open to

the atmosphere.

The pressure-relief device is to be operated regularly to remove lime deposits and to verify that it is not blocked

A discharge pipe connected to the pressure-relief device is to be installed in a continuously downward direction and in a frost-free environment.

Installation of the water tank safety valve

Pressure of the water tank will gradually increase during heating and a safety valve is required to discharge some water for pressure relief. If not or installed incorrectly, it would cause the water tank to expand, to be deformed, to be damaged or even lead to personal injury. The arrow → of the water tank safety valve shall point toward the water tank. No cut-off valve or check valve is required between the safety valve and the water tank, as the safety valve would fail to work. The safety valve requires the drain hose for installation and should be securely fastened. The drain hose should be led naturally downward into the floor drain without any convex bow, intertwist or fold. Extra length of the drain hose inside the floor drain should be cut away in case of poor drainage or water freeze under low atmospheric temperature.The recommended action pressure for the safety valve is 0.7Mpa, the same as that for the water tank. Do comply with this requirement for section of the safety valve; otherwise the water tank would fail to work normally.

The drain pipe should go downwards and be connected with the floor drain. Its outlet should be lower than the bottom of the water tank. A cutoff valve is required for the drain pipe and should be installed where it is convenient for operation.

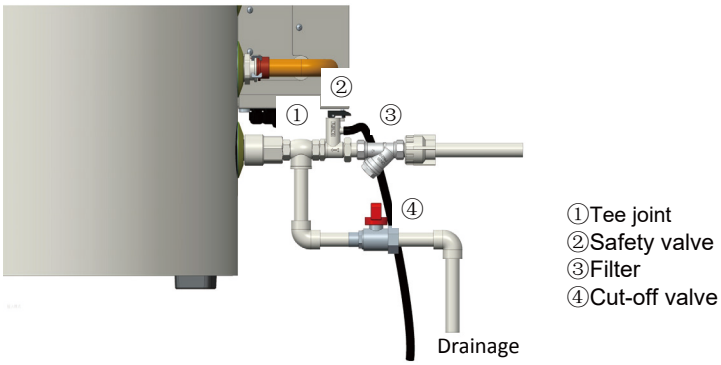

Installation Mode 1 of the Tap Water Safety Valve (Inlet Water Pressure =0.1~0.5MPa)

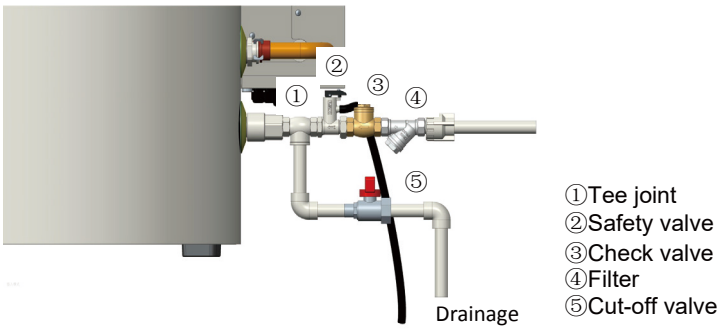

Installation Mode 2 of the Tap Water Valve (Inlet Water Pressure<0.1MPa)

The safety valve is bypass installed in the installation mode 2. A check valve is required at the tap water pipe and installed horizontally with the valve cap vertically upwards and the arrow direction at the valve body the same as the water flow.